THE REPUBLIC OF KENYA

THE COUNTY GOVERNMENT OF GARISSA

DEPARTMENT OF WATER, ENVIRONMENT AND NATURAL RESOURCES
PO BOX 563-70100, GARISSA

STANDARD TENDER DOCUMENT
FOR

PROPOSED BURBURIS WATER CONNECTIONS AT GALBERT WARD IN GARISSA COUNTY

TENDER NO. CGG/T/WS/09/2025-2026

SUBMISSION DEADLINE –
MONDAY 22ND JUNE, 2026 AT 10.30 A.M. E.A.T

AT TENDER BOX LOCATED AT THE URBAN PLANING ASSEMBLY GROUND,
KISMAYU ROAD
P.O.BOX 563 -70100
GARISSA, KENYA
E-mail:
info@garissa.go.ke
Website. www.garissa.go.ke

OPEN

TABLE OF CONTENTS

INVITATION FOR TENDER 3
INVITATION TO TENDER 4
PART I: TENDERING PROCEDURES 7
SECTION I: INSTRUCTIONS TO TENDERERS 8
A General Provisions 8
B. Contents of Tender Documents 11
C. Preparation of Tenders 12
D. Submission and Opening of Tenders 18
E. Evaluation and Comparison of Tenders 20
F. Award of Contract 24
SECTION III - EVALUATION AND QUALIFICATION CRITERIA 31
SECTION IV - TENDERING FORMS 39
OTHER FORMS 55
FORM SD1 62
FORM SD2 63
FORM SD3 64
PART II - WORK REQUIREMENTS 71
SECTION V – DRAWINGS 72
SECTION VI - SPECIFICATIONS 73
SECTION VII- BILLS OF QUANTITIES 74
PREAMBLE AND NOTES TO BILLS OF QUANTITIES 77
PART III - CONDITIONS OF CONTRACT AND CONTRACT FORMS 105
SECTION VIII - GENERAL CONDITIONS OF CONTRACT 106
SECTION IX - SPECIAL CONDITIONS OF CONTRACT 124
SECTION X - CONTRACT FORMS 128
FORM No 1: NOTIFICATION OF INTENTION TO AWARD 129
FORM No. 2 - REQUEST FOR REVIEW 132
FORM No 3: LETTER OF AWARD 133
FORM No 4: CONTRACT AGREEMENT 134
FORM No. 5 - PERFORMANCE SECURITY 135
FORM No. 6 - PERFORMANCE SECURITY 136
FORM No. 7 - ADVANCE PAYMENT SECURITY 138
FORM No. 8 - RETENTION MONEY SECURITY 139
FORM No. 9 BENEFICIAL OWNERSHIP DISCLOSURE FORM 140

SECTION I

INVITATION FOR TENDER

INVITATION TO TENDER

INVITATION DATE: 12/06/2026

PROCURING ENTITY: COUNTY GOVERNMENT OF GARISSA
P.O.BOX 563 – 70100 GARISSA, KENYA

CONTRACT NAME AND DESCRIPTION: PROPOSED BURBURIS WATER CONNECTIONS AT GALBERT WARD IN GARISSA COUNTY

- The **COUNTY GOVERNMENT OF GARISSA** invites sealed tenders for the **PROPOSED BURBURIS WATER CONNECTIONS AT GALBERT WARD IN GARISSA COUNTY.**

- Tendering will be conducted under open **National** competitive method using a standardized tender document. Tendering is open to **All Suppliers Registered with the National Construction Authority in Water Works (NCA) Category 4 and above AND NCA Category 6 and above in Electromechanical.**

- Qualified and interested bidders may obtain further information and inspect the Tender Documents during office hours (8.00AM- 1.00PM and 2.00PM - 5.00PM local time at the address given below.

- A complete set of tender documents may be downloaded by interested bidders FREE OF CHARGE from the Website(s) www.garissa county.go.ke or the Public Procurement Information Portal (tenders.go.ke).

- Tender documents may be viewed and downloaded for free from the website www.garissa county.go.ke. Tenderers who download the tender document must forward their particulars immediately to the director procurement office, P.O. Box 563 – 70100, Garissa, Kenya to facilitate any further clarification or addendum.

- Tenders shall be quoted be in Kenya Shillings and shall include all taxes. Tenders shall remain valid for **150 days** from the date of opening of tenders.

- All Tenders must be accompanied by a tender Security of **Kshs. 4,000,000.00 (Kenya Shillings Four Million Only)** in the form of: -
  a) Cash
  b) A bank guarantee
  c) A guarantee by an insurance company registered and licensed by the Insurance Regulatory Authority listed by the Authority
  d) A guarantee issued by a Financial Institution Approved and Licensed by the Central Bank of Kenya.

- The Tenderer shall chronologically serialize all pages of the tender documents submitted.

- Completed tenders must be delivered to the address below on or before ***Monday 22nd June, 2026 at 10.30 a.m. E.A.T.*** Electronic Tenders **will not** be permitted.

- Site visits is highly recommended in consultation with
- Tenders will be opened immediately after the deadline date and time specified above or any deadline date and times specified later. Tenders will be publicly opened in the presence of the Tenderers' designated representatives who choose to attend at the address below.

- Late tenders will be rejected.

- The addresses referred to above are:

1. The addresses referred to above are:

A. Address for obtaining further information

PROCUREMENT & SUPPLY CHAIN MANAGEMENT OFFICE
COUNTY GOVERNMENT OF GARISSA
ALONG LAMU ROAD-OPP. YOUNG MUSLIM
P.O. BOX 563-70100
GARISSA, KENYA.

B. <u>Address for Submission of Tenders.</u>

AT TENDER BOX LOCATED AT THE URBAN PLANING
ASSEMBLY GROUND, KISMAYU ROAD
P.O.BOX 563 -70100
GARISSA, KENYA.



[Authorized Official (name, designation, Signature and date)]

Name: Mohamed Ibrahim Sugow

(*Official of the Procuring Entity issuing the invitation)*

Designation: Chief Officer-Water

PART I: TENDERING PROCEDURES

SECTION I: INSTRUCTIONS TO TENDERERS

A General Provisions

1. Scope of Tender

1.1 The Procuring Entity as defined in the Appendix to Conditions of Contract invites tenders for Works Contract as described in the tender documents. The name, identification, and number of lots (contracts) of this Tender Document are **specified in the TDS.**

2. Fraud and Corruption

2.1 The Procuring Entity requires compliance with the provisions of the Public Procurement and Asset Disposal Act, 2015, Section 62 "Declaration not to engage in corruption". The tender submitted by a person shall include a declaration that the person shall not engage in any corrupt or fraudulent practice and a declaration that the person or his or her sub-contractors are not debarred from participating in public procurement proceedings.

2.2 The Procuring Entity requires compliance with the provisions of the Competition Act 2010, regarding collusive practices in contracting. Any tenderer found to have engaged in collusive conduct shall be disqualified and criminal and/or civil sanctions may be imposed. To this effect, Tenders shall be required to complete and sign the "Certificate of Independent Tender Determination" annexed to the Form of Tender.

2.3 Unfair Competitive Advantage - Fairness and transparency in the tender process require that the firms or their Affiliates competing for a specific assignment do not derive a competitive advantage from having provided consulting services related to this tender. To that end, the Procuring Entity shall indicate in the **Data Sheet** and make available to all the firms together with this tender document all information that would in that respect give such firm any unfair competitive advantage over competing firms.

2.4 Unfair Competitive Advantage -Fairness and transparency in the tender process require that the Firms or their Affiliates competing for a specific assignment do not derive a competitive advantage from having provided consulting services related to this tender being tendered for. The Procuring Entity shall indicate in the **TDS** firms (if any) that provided consulting services for the contract being tendered for. The Procuring Entity shall check whether the owners or controllers of the Tenderer are same as those that provided consulting services. The Procuring Entity shall, upon request, make available to any tenderer information that would give such firm unfair competitive advantage over competing firms.

3. Eligible Tenderers

3.1 A Tenderer may be a firm that is a private entity, a state-owned enterprise or institution subject to ITT 3.7 or any combination of such entities in the form of a joint venture (JV) under an existing agreement or with the intent to enter into such an agreement supported by a letter of intent. Public employees and their close relatives *(spouses, children, brothers, sisters and uncles and aunts)* are not eligible to participate in the tender. In the case of a joint venture, all members shall be jointly and severally liable for the execution of the entire Contract in accordance with the Contract terms. The JV shall nominate a Representative who shall have the authority to conduct all business for and on behalf of any and all the members of the JV during the tendering process and, in the event the JV is awarded the Contract, during contract execution. The maximum number of JV members shall be specified in the **TDS.**

3.2 Public Officers of the Procuring Entity, their Spouses, Child, Parent, Brothers or Sister. Child, Parent, Brother or Sister of a Spouse, their business associates or agents and firms/organizations in which they have a substantial or controlling interest shall not be eligible to tender or be awarded a contract. Public Officers are also not allowed to participate in any procurement proceedings.

3.3 A Tenderer shall not have a conflict of interest. Any tenderer found to have a conflict of

Interest shall be disqualified. Atenderer may be considered to have a conflict of interest for the purpose of this tendering process, if the tenderer:

a) Directly or indirectly controls, is controlled by or is under common control with another tenderer; or

b) Receives or has received any direct or indirect subsidy from another tenderer; or

c) Has the same legal representative as another tenderer; or

d) Has a relationship with another tenderer, directly or through common third parties, that puts it in a position,

to influence the tender of another tenderer, or influence the decisions of the Procuring Entity regarding this tendering process; or

e) Any of its affiliates participated as a consultant in the preparation of the design or technical specifications of the works that are the subject of the tender; or

f) any of its affiliates has been hired (or is proposed to be hired) by the Procuring Entity as Engineer for the Contract implementation; or

g) Would be providing goods, works, or non-consulting services resulting from or directly related to consulting services for the preparation or implementation of the contract specified in this Tender Document or

h) Has a close business or family relationship with a professional staff of the Procuring Entity who:

i) are directly or indirectly involved in the preparation of the Tender document or specifications of the Contract, and/or the Tender evaluation process of such contract; or

ii) Would be involved in the implementation or supervision of such Contract unless the conflict stemming from such relationship has been resolved in a manner acceptable to the Procuring Entity throughout the tendering process and execution of the Contract.

3.4 Atenderer shall not be involved in corrupt, coercive, obstructive, collusive or fraudulent practice. Atenderer that is proven to have been involved any of these practices shall be automatically disqualified.

3.5 A Tenderer (either individually or as a JV member) shall not participate in more than one Tender, except for permitted alternative tenders. This includes participation as a subcontractor in other Tenders. Such participation shall result in the disqualification of all Tenders in which the firm is involved. A firm that is not a tenderer, or a JV member may participate as a subcontractor in more than one tender. Members of a joint venture may not also make an individual tender, be a subcontractor in a separate tender or be part of another joint venture for the purposes of the same Tender.

3.6 A Tenderer may have the nationality of any country, subject to the restrictions pursuant to ITT 4.8.A Tenderer shall be deemed to have the nationality of a country if the Tenderer is constituted, incorporated or registered in and operates in conformity with the provisions of the laws of that country, as evidenced by its articles of incorporation (or equivalent documents of constitution or association) and its registration documents, as the case may be. This criterion also shall apply to the determination of the nationality of proposed subcontractors or sub- consultants for any part of the Contract including related Services.

3.7 Tenderer that has been debarred from participating in public procurement shall be ineligible to tender or be awarded a contract. The list of debarred firms and individuals is available from the website of PPRA www.ppra.go.ke..

3.8 Tenderers that are state-owned enterprises or institutions may be eligible to compete and be awarded a Contract(s) only if they are accredited by PPRA to be (i) a legal public entity of the state Government and/or public administration, (ii) financially autonomous and not receiving any significant subsidies or budget support from any public entity or Government, and (iii) operating under commercial law and vested with legal rights and liabilities similar to any commercial enterprise to enable it compete with firms in the private sector on an equal basis.

3.9 AFirms and individuals may be ineligible if their countries of origin (a) as a matter of law or official regulations, Kenya prohibits commercial relations with that country, or (b) by an act of compliance with a decision of the United Nations Security Council taken under Chapter VII of the Charter of the United Nations, Kenya prohibits any import of goods or contracting of works or services from that country, or any payments to any country, person, or entity in that country. Atenderer shall provide such documentary evidence of eligibility satisfactory to the Procuring Entity, as the Procuring Entity shall reasonably request.

3.10 Foreign tenderers are required to source at least forty (40%) percent of their contract inputs (in supplies, subcontracts and labor) from national suppliers and contractors. To this end, a foreign tenderer shall provide in its tender documentary evidence that this requirement is met. Foreign tenderers not meeting this criterion will be automatically disqualified. Information required to enable the Procuring Entity to determine if this condition is met shall be provided in for this purpose is be provided in *"SECTION III - EVALUATION AND QUALIFICATION CRITERIA, Item 9".*

3.11 Pursuant to the eligibility requirements of ITT 4.10, a tender is considered a foreign tenderer, if the tenderer is not registered in Kenya or if the tenderer is registered in Kenya and has less than 51 percent ownership by Kenyan

Citizens. JVs are considered as foreign tenderers if the individual member firms are not registered in Kenya or if are registered in Kenya and have less than 51 percent ownership by Kenyan citizens. The JV shall not subcontract to foreign firms more than 10 percent of the contract price, excluding provisional sums.

3.12 The National Construction Authority Act of Kenya requires that all local and foreign contractors beregistered with the National Construction Authority and be issued with a Registration Certificate before they can undertake any construction works in Kenya. Registration shall not be a condition for tender, but it shall be a condition of contract award and signature. A selected tenderer shall be given opportunity to register before such award and signature of contract. Application for registration with National Construction Authority may be accessed from the website www.nca.go.ke.

3.13 The Competition Act of Kenya requires that firms wishing to tender as Joint Venture undertakings which may prevent, distort or lessen competition in provision of services are prohibited unless they are exempt in accordance with the provisions of Section 25 of the Competition Act, 2010. JVs will be required to seek for exemption from the Competition Authority. Exemption shall not be a condition for tender, but it shall be a condition of contract award and signature. A JV tenderer shall be given opportunity to seek such exemption as a condition of award and signature of contract. Application for exemption from the Competition Authority of Kenya may be accessed from the website www.cak.go.ke

3.14 A Kenyan tenderer shall provide evidence of having fulfilled his/her tax obligations by producing a valid tax clearance certificate or tax exemption certificate issued by the Kenya Revenue Authority.

4. Eligible Goods, Equipment, and Services

4.1 Goods, equipment and services to be supplied under the Contract may have their origin in any country that is not eligible under ITT 3.9. At the Procuring Entity's request, Tenderers may be required to provide evidence of the origin of Goods, equipment and services.

4.2 Any goods, works and production processes with characteristics that have been declared by the relevant national environmental protection agency or by other competent authority as harmful to human beings and to the environment shall not be eligible for procurement.

5. Tenderer's Responsibilities

5.1 The tenderer shall bear all costs associated with the preparation and submission of his/her Tender, and the Procuring Entity will in no case be responsible or liable for those costs.

5.2 The tenderer, at the tenderer's own responsibility and risk, is encouraged to visit and examine the Site of the Works and its surroundings and obtain all information that may be necessary for preparing the tender and entering into a contract for construction of the Works. The costs of visiting the Site shall be at the tenderer's own expense.

5.3 The Tenderer and any of its personnel or agents will be granted permission by the Procuring Entity to enter upon its premises and lands for the purpose of such visit. The Tenderer shall indemnify the Procuring Entity against all liability arising from death or personal injury, loss of or damage to property, and any other losses and expenses incurred as a result of the inspection.

5.4 The tenderer shall provide in the Form of Tender and Qualification Information, a preliminary description of the proposed work method and schedule, including charts, as necessary or required.

B. Contents of Tender Documents

6. Sections of Tender Document

6.1 The tender document consists of Parts 1, 2, and 3, which includes all the sections specified below, and which should be read in conjunction with any Addenda issued in accordance with ITT 8.

PART I Tendering Procedures

i) Section I - Instructions to Tenderers (ITT)
ii) Section II - Tender Data Sheet (TDS)
iii) Section III - Evaluation and Qualification Criteria
iv) Section IV - Tendering Forms

PART II Works Requirements

i) Section V - Drawings
ii) Section VI - Specifications
iii) Section VII - Bills of Quantities

PART III Conditions of Contract and Contract Forms

i) Section VIII - General Conditions of Contract (GCC)
ii) Section IX - Special Conditions of Contract (SC)
iii) Section X - Contract Forms

6.2 The Invitation to Tender Document (ITT) issued by the Procuring Entity is not part of the Contract documents.

6.3 Unless obtained directly from the Procuring Entity, the Procuring Entity is not responsible for the completeness of the Tender document, responses to requests for clarification, the minutes of the pre-Tender meeting (if any), or Addenda to the Tender document in accordance with ITT 8. In case of any contradiction, documents obtained directly from the Procuring Entity shall prevail.

6.4 The Tenderer is expected to examine all instructions, forms, terms, and specifications in the Tender Document and to furnish with its Tender all information and documentation as is required by the Tender document.

7. Site Visit

7.1 The Tenderer, at the Tenderer's own responsibility and risk, is encouraged to visit and examine and inspect the Site of the Required Services and its surroundings and obtain all information that may be necessary for preparing the Tender and entering into a contract for the Services. The costs of visiting the Site shall be at the Tenderer's own expense.

8. Pre-Tender Meeting

8.1 The Procuring Entity shall specify in the **TDS** if a pre-tender meeting will be held, when and where. The Procuring Entity shall also specify in the **TDS** if a pre-arranged pretender site visit will be held and when. The Tenderer's designated representative is invited to attend a pre-arranged pretender visit of the site

of the works. The purpose of the meeting will be to clarify issues and to answer questions on any matter that may be raised at that stage.

8.2 The Tenderer is requested to submit any questions in writing, to reach the Procuring Entity not later than the period specified in the **TDS** before the meeting.

8.3 Minutes of the pre-Tender meeting and the pre-arranged pretender site visit of the site of the works, if applicable, including the text of the questions asked by Tenderers and the responses given, together with any responses prepared after the meeting, will be transmitted promptly to all Tenderers who have acquired the Tender Documents in accordance with ITT
6.3. Minutes shall not identify the source of the questions asked.

8.4 The Procuring Entity shall also promptly publish anonym zed (*no names*) Minutes of the pre-Tender meeting and the pre-arranged pretender visit of the site of the works at the web page identified in the **TDS**. Any modification to the Tender Documents that may become necessary as a result of the pre-tender meeting and the pre-arranged pretender site visit, shall be made by the Procuring Entity exclusively through the issue of an Addendum pursuant to ITT 8 and not through the minutes of the pre-Tender meeting. Nonattendance at the pre-Tender meeting will not be a cause for disqualification of a Tenderer.

9. Clarification and amendments of Tender Documents

9.1 A Tenderer requiring any clarification of the Tender Document shall contact the Procuring Entity in writing at the Procuring Entity's address specified in the **TDS** or raise its enquiries during the pre-Tender meeting and the pre- arranged pretender visit of the site of the works if provided for in accordance with ITT 8.4. The Procuring Entity will respond in writing to any request for clarification, provided that such request is received no later than the period specified in the **TDS** prior to the deadline for submission of tenders. The Procuring Entity shall forward copies of its response to all tenderers who have acquired the Tender Documents in accordance with ITT 6.3, including a description of the inquiry but without identifying its source. If specified in the **TDS**, the Procuring Entity shall also promptly publish its response at the web page identified in the **TDS**. Should the clarification result in changes to the essential elements of the Tender Documents, the Procuring Entity shall amend the Tender Documents appropriately following the procedure under ITT 8.4.

10. Amendment of Tendering Document

10.1 At any time prior to the deadline for submission of Tenders, the Procuring Entity may amend the Tendering document by issuing addenda.

10.2 Any addendum issued shall be part of the tendering document and shall be Communicated in writing to all who have obtained the tendering document from the Procuring Entity in accordance with ITT 6.3. The Procuring Entity shall also promptly publish the addendum on the Procuring Entity's web page in accordance with ITT 8.4.

10.3 To give prospective Tenderers reasonable time in which to take an addendum into account in preparing their Tenders, the Procuring Entity shall extend, as necessary, the deadline for submission of Tenders, in accordance with ITT 25.2 below**.**

C. Preparation of Tenders

11. Cost of Tendering

11.1 The Tenderer shall bear all costs associated with the preparation and submission of its Tender, and the Procuring Entity shall not be responsible or liable for those costs, regardless of the conduct or outcome of the tendering process.

12. Language of Tender

12.1 The Tender, as well as all correspondence and documents relating to the tender exchanged by the tenderer and the Procuring Entity, shall be written in the English Language. Supporting documents and printed literature that are part of the Tender may be in another language provided they are accompanied by an accurate and notarized translation of the relevant passages into the English Language, in which case, for purposes of interpretation of the Tender, such translation shall govern.

13. Documents Comprising the Tender

13.1 The Tender shall comprise the following:

a) Form of Tender prepared in accordance with ITT 14;

b) Schedules including priced Bill of Quantities, completed in accordance with ITT 14 and ITT 16;

c) Tender Security or Tender-Securing Declaration, in accordance with ITT 21.1;

d) Alternative Tender, if permissible, in accordance with ITT 15;

e) Authorization: written confirmation authorizing the signatory of the Tender to commit the Tenderer, in accordance with ITT 22.3;

f) Qualifications: documentary evidence in accordance with ITT 19establishing the Tenderer's qualifications to perform the Contract if its Tender is accepted;

g) Conformity: a technical proposal in accordance with ITT 18;

h) Any other document required in the **TDS**.

13.2 In addition to the requirements under ITT 11.1, Tenders submitted by a JV shall include a copy of the Joint Venture Agreement entered into by all members. Alternatively, a letter of intent to execute a Joint Venture Agreement in the event of a successful Tender shall be signed by all members and submitted with the Tender,

Together with a copy of the proposed Agreement. The Tenderer shall chronologically serialize pages of all tender documents submitted.

13.3 The Tenderer shall furnish in the Form of Tender information on commissions and gratuities, if any, paid or to be paid to agents or any other party relating to this Tender**.**

14.Form of Tender and Schedules

14.1 The Form of Tender and Schedules, including the Bill of Quantities, shall be prepared using the relevant forms furnished in Section IV, Tendering Forms. The forms must be completed without any alterations to the text, and no substitutes shall be accepted except as provided under ITT 20.3. All blank spaces shall be filled in with the information requested.

15.Alternative Tenders

15.1 Unless otherwise specified in the **TDS**, alternative Tenders shall not be considered.

15.2 When alternative times for completion are explicitly invited, a statement to that effect will be included in the **TDS**, and the method of evaluating different alternative times for completion will be described in Section III, Evaluation and Qualification Criteria.

15.3 Except as provided under ITT 13.4 below, Tenderers wishing to offer technical alternatives to the requirements of the Tender Documents must first price the Procuring Entity's design as described in the Tender Documents and shall further provide all information necessary for a complete evaluation of the alternative by the Procuring Entity, including drawings, design calculations, technical specifications, breakdown of prices, and proposed construction methodology and other relevant details. Only the technical alternatives, if any, of the Tenderer with the Winning Tender conforming to the basic technical requirements shall be considered by the Procuring Entity. When specified in the **TDS**, Tenderers are permitted to submit alternative technical solutions for specified parts of the Works, and such parts will be identified in the **TDS**, as will the method for their evaluating, and described in Section VII, Works' Requirements.

16.Tender Prices and Discounts

16.1 The prices and discounts (including any price reduction) quoted by the Tenderer in the Form of Tender and in the Bill of Quantities shall conform to the requirements specified below.

16.2 The Tenderer shall fill in rates and prices for all items of the Works described in the Bill of Quantities. Items against which no rate or price is entered by the Tenderer shall be deemed covered by the rates for other items in the Bill of Quantities and will not be paid for separately by the Procuring Entity. An item not listed in the priced Bill of Quantities shall be assumed to be not included in the Tender, and provided that the Tender is determined substantially responsive notwithstanding this omission, the average price of the item quoted by substantially responsive Tenderers will be added to the Tender price and the equivalent total cost of the Tender so determined will be used for price comparison.

16.3 The price to be quoted in the Form of Tender, in accordance with ITT 14.1, shall be the total price of the Tender, including any discounts offered.

16.4 The Tenderer shall quote any discounts and the methodology for their application in the Form of Tender, in accordance with ITT 14.1.

16.5 It will be specified in the **TDS** if the rates and prices quoted by the Tenderer are or are not subject to adjustment during the performance of the Contract in accordance with the provisions of the Conditions of Contract, except in cases where the contract is subject to fluctuations and adjustments, not fixed price. In such a case, the Tenderer shall furnish the indices and weightings for the price adjustment formulae in the Schedule of Adjustment Data and the Procuring Entity may require the Tenderer to justify its proposed indices and weightings.

16.6 Where tenders are being invited for individual lots (contracts)or for any combination of lots (packages), tenderers wishing to offer discounts for the award of more than one Contract shall specify in their Tender the price reductions applicable to each package, or alternatively, to individual Contracts within the package. Discounts shall be submitted in accordance with ITT 16.4, provided the Tenders for all lots (contracts) are opened at the same time.

16.7 All duties, taxes, and other levies payable by the Contractor under the Contract, or for any other cause, as of the date 30 days prior to the deadline for submission of Tenders, shall be included in the rates and prices and the total Tender Price submitted by the Tenderer.

17. Currencies of Tender and Payment

17.1 Tenderers shall quote entirely in Kenya Shillings. The unit rates and the prices shall be quoted by the Tenderer in the Bill of Quantities, entirely in Kenya shillings. A Tenderer expecting to incur expenditures in other currencies for inputs to the Works supplied from outside Kenya shall device own ways of getting foreign currency to meet those expenditures?

18. Documents Comprising the Technical Proposal

18.1 The Tenderer shall furnish a technical proposal including a statement of work methods, equipment, personnel, schedule and any other information as stipulated in Section IV, Tender Forms, in sufficient detail to demonstrate the adequacy of the Tenderer's proposal to meet the work's requirements and the completion time.

19. Documents Establishing the Eligibility and Qualifications of the Tenderer

19.1 Tenderers shall complete the Form of Tender, included in Section IV, Tender Forms, to establish Tenderer's eligibility in accordance with ITT 4.

19.2 In accordance with Section III, Evaluation and Qualification Criteria, to establish its qualifications to perform the Contract the Tenderer shall provide the information requested in the corresponding information sheets included in Section IV, Tender Forms.

19.3 A margin of preference will not be allowed. Preference and reservations will be allowed, individually or in joint ventures. Applying for eligibility for Preference and reservations shall supply all information required to satisfy the criteria for eligibility specified in accordance with ITT 33.1.

19.4 Tenderers shall be asked to provide, as part of the data for qualification, such information, including details of ownership, as shall be required to determine whether, according to the classification established by the Procuring Entity, a contractor or group of contractor's qualifies for a margin of preference. Further the information will enable the Procuring Entity to identify any actual or potential conflict of interest in relation to the procurement and/or contract management processes, or a possibility of collusion between tenderers, and thereby help to prevent any corrupt influence in relation to the procurement process or contract management.

19.5 The purpose of the information described in ITT 19.4 above overrides any claims to confidentiality which a tenderer may have. There can be no circumstances in which it would be justified for a tenderer to keep information relating to its ownership and control confidential where it is tendering to undertake public sector work and receive public sector funds. Thus, confidentiality will not be accepted by the Procuring Entity as a justification for a Tenderer's failure to disclose, or failure to provide required information on its ownership and control.

19.6 The Tenderer shall provide further documentary proof, information or authorizations that the Procuring Entity may request in relation to ownership and control which information on any changes to the information which was provided by the tenderer under ITT 6.3. The obligations to require this information shall continue for the duration of the procurement process and contract performance and after completion of the contract, if any change to the information previously provided may reveal a conflict of interest in relation to the award or management of the contract.

19.7 All information provided by the tendered pursuant to these requirements must be complete, current and accurate as at the date of provision to the Procuring Entity. In submitting the information required pursuant to these requirements, the Tenderer shall warrant that the information submitted is complete, current and accurate as at the

date of submission to the Procuring Entity.

19.8 If a tenderer fails to submit the information required by these requirements, its tender will be rejected. Similarly, if the Procuring Entity is unable, after taking reasonable steps, to verify to a reasonable degree the information submitted by a tendered pursuant to these requirements, then the tender will be rejected.

19.9 If information submitted by a tendered pursuant to these requirements, or obtained by the Procuring Entity (whether through its own enquiries, through notification by the public or otherwise), shows any conflict of interest which could materially and improperly benefit the tenderer in relation to the procurement or contract management process, then:

i) if the procurement process is still ongoing, the tenderer will be disqualified from the procurement process,
ii) if the contract has been awarded to that tenderer, the contract award will be set aside,
iii) the tenderer will be referred to the relevant law enforcement authorities for investigation of whether the tenderer or any other persons have committed any criminal offence.

19.10 If a tenderer submits information pursuant to these requirements that is incomplete, inaccurate or out-of-date, or attempts to obstruct the verification process, then the consequences ITT 6.7 will ensue unless the tenderer can show to the reasonable satisfaction of the Procuring Entity that any such act was not material or was due to genuine error which was not attributable to the intentional act, negligence or recklessness of the tenderer.

20. Period of Validity of Tenders

20.1 Tenders shall remain valid for the Tender Validity period specified in the **TDS**. The Tender Validity period starts from the date fixed for the Tender submission deadline (as prescribed by the Procuring Entity in accordance with ITT 24). A Tender valid for a shorter period shall be rejected by the Procuring Entity as non-responsive.

20.2 In exceptional circumstances, prior to the expiration of the Tender validity period, the Procuring Entity may request Tenderers to extend the period of validity of their Tenders. The request and the responses shall be made in writing. If a Tender Security is requested in accordance with ITT 21.1, it shall also be extended for thirty (30) days beyond the deadline of the extended validity period. A Tenderer may refuse the request without forfeiting its Tender security. A Tenderer granting the request shall not be required or permitted to modify its Tender, except as provided in ITT 20.3.

20.3 If the award is delayed by a period exceeding the number of days to be specified in the **TDS** days beyond the expiry of the initial tender validity period, the Contract price shall be determined as follows**:**

a) in the case of **fixed price** contracts, the Contract price shall be the tender price Adjusted by the factor specified in the **TDS**;

b) in the case of **adjustable price** contracts, no adjustment shall be made; or in any case, tender evaluation shall be based on the tender price without taking into consideration the applicable correction from those indicated above.

21. Tender Security

21.1 The Tenderer shall furnish as part of its Tender, either a Tender-Securing Declaration or a Tender Security as specified in the **TDS**, in original form and, in the case of a Tender Security, in the amount and currency specified in the **TDS**. A Tender-Securing Declaration shall use the form included in Section IV, Tender Forms**.**

21.2 If a Tender Security is specified pursuant to ITT 19.1, the Tender Security shall be a demand guarantee in any of the following forms at the Tenderer's option:

a) an unconditional Bank Guarantee issued by reputable commercial bank); or
b) an irrevocable letter of credit;
c) a Banker's cheque issued by a reputable commercial bank; or
d) another security specified **in the TDS**,

21.3 If an unconditional bank guarantee is issued by a bank located outside Kenya, the issuing bank shall have a correspondent bank located in Kenya to make it enforceable. The Tender Security shall be valid for thirty (30) days beyond the original validity period of the Tender, or beyond any period of extension if requested under ITT 20.2.

21.4 If a Tender Security or Tender-Securing Declaration is specified pursuant to ITT 19.1, any Tender not accompanied by a substantially responsive Tender Security or Tender- Securing Declaration shall be rejected by the Procuring Entity as non-responsive.

21.5 If a Tender Security is specified pursuant to ITT 21.1, the Tender Security of unsuccessful Tenderers shall be returned as promptly as possible upon the successful Tenderer's signing the Contract and furnishing the Performance Security and any other documents required in the **TDS**. The Procuring Entity shall also promptly return the tender security to the tenderers where the procurement proceedings are terminated, all tenders were determined nonresponsive, or a bidder declines to extend tender validity period.

21.6 The Tender Security of the successful Tenderer shall be returned as promptly as possible once the successful Tenderer has signed the Contract and furnished the required Performance Security, and any other documents required in the **TDS**.

21.7 The Tender Security may be forfeited, or the Tender-Securing Declaration executed:

a) if a Tenderer withdraws its Tender during the period of Tender validity specified by the Tenderer on the Form of Tender, or any extension thereto provided by the Tenderer; or

b) if the successful Tenderer fails to:

i) sign the Contract in accordance with ITT 50; or

ii) Furnish a Performance Security and if required in the **TDS**, and any other documents required in the **TDS**.

21.8 Where tender securing declaration is executed, the Procuring Entity shall recommend to the PPRA that PPRA debars the Tenderer from participating in public procurement as provided in the law.

21.9 The Tender Security or the Tender-Securing Declaration of a JV shall be in the name of the JV that submits the Tender. If the JV has not been legally constituted into a legally enforceable JV at the time of tendering, the Tender Security or the Tender-Securing Declaration shall be in the names of all future members as named in the letter of intent referred to in ITT 4.1 and ITT 11.2.

21.10 A tenderer shall not issue a tender security to guarantee itself.

22. Format and Signing of Tender

22.1 The Tenderer shall prepare one original of the documents comprising the Tender as described in ITT 13 and clearly mark it "ORIGINAL." Alternative Tenders, if permitted in accordance with ITT 15, shall be clearly marked "ALTERNATIVE." In addition, the Tenderer shall submit copies of the Tender, in the number specified in the **TDS** and clearly mark them "COPY." In the event of any discrepancy between the original and the copies, the original shall prevail.

22.2 Tenderers shall mark as "CONFIDENTIAL" all information in their Tenders which is confidential to their business. This may include proprietary information, trade secrets, or commercial or financially sensitive information.

22.3 The original and all copies of the Tender shall be typed or written in indelible ink and shall be signed by a person duly authorized to sign on behalf of the Tenderer. This authorization shall consist of a written confirmation as specified in the **TDS** and shall be attached to the Tender. The name and position held by each person signing the authorization must be typed or printed below the signature. All pages of the Tender where entries or amendments have been made shall be signed or initialed by the person signing the Tender.

22.4 In case the Tenderer is a JV, the Tender shall be signed by an authorized representative of the JV on behalf of the JV, and to be legally binding on all the members as evidenced by a power of attorney signed by their legally authorized representatives.

22.5 Any inter-lineation, erasures, or overwriting shall be valid only if they are signed or initialed by the person signing the Tender.

D. Submission and Opening of Tenders

23. Sealing and Marking of Tenders

23.1 Depending on the sizes or quantities or weight of the tender documents, a tenderer may use an envelope, package or container. The Tenderer shall deliver the Tender in a single sealed envelope, or in a single sealed package, or in a single sealed container bearing the name and Reference number of the Tender, addressed to the Procuring Entity and a warning not to open before the time and date for Tender opening date. Within the single envelope, package or container, the Tenderer shall place the following separate, sealed envelopes:

a) in an envelope or package or container marked "ORIGINAL", all documents comprising the Tender, as described in ITT 11; and

b) in an envelope or package or container marked "COPIES", all required copies of the Tender; and

c) if alternative Tenders are permitted in accordance with ITT 15, and if relevant:

i) in an envelope or package or container marked "ORIGINAL –ALTERNATIVE TENDER", the alternative Tender; and

ii) in the envelope or package or container marked "COPIES- ALTERNATIVE TENDER", all required copies of the alternative Tender.

The inner envelopes or packages or containers shall:

a) bear the name and address of the Procuring Entity.

b) bear the name and address of the Tenderer; and

c) bear the name and Reference number of the Tender.

23.2 If an envelope or package or container is not sealed and marked as required, the *Procuring Entity* will assume no responsibility for the misplacement or premature opening of the Tender. Tenders that are misplaced or opened prematurely will not be accepted.

24. Deadline for Submission of Tenders

24.1 Tenders must be received by the Procuring Entity at the address specified in the **TDS** and no later than the date and time also specified in the **TDS**. When so specified in the **TDS**, Tenderers shall have the option of submitting their Tenders electronically. Tenderers submitting Tenders electronically shall follow the electronic Tender submission procedures specified in the **TDS**.

24.2 The Procuring Entity may, at its discretion, extend the deadline for the submission of Tenders by amending the Tender Documents in accordance with ITT 8, in which case all rights and obligations of the Procuring Entity and Tenderers previously subject to the deadline shall thereafter be subject to the deadline as extended.

25. Late Tenders

25.1 The Procuring Entity shall not consider any Tender that arrives after the deadline for submission of tenders, in accordance with ITT 24. Any Tender received by the Procuring Entity after the deadline for submission of Tenders shall be declared late, rejected, and returned unopened to the Tenderer.

26. Withdrawal, Substitution, and Modification of Tenders

26.1 A Tenderer may withdraw, substitute, or modify its Tender after it has been submitted by sending a written notice, duly signed by an authorized representative, and shall include a copy of the authorization in accordance with ITT 22.3, (except that withdrawal notices do not require copies). The corresponding substitution or modification of the Tender must accompany the respective written notice. All notices must be:

a) prepared and submitted in accordance with ITT 22 and ITT 23 (except that withdrawals notices do not require copies), and in addition, the respective envelopes shall be clearly marked "WITHDRAWAL," "SUBSTITUTION," "MODIFICATION; "and

b) Received by the Procuring Entity prior to the deadline prescribed for submission of Tenders, in accordance with ITT 24.

26.2 Tenders requested to be withdrawn in accordance with ITT 26.1 shall be returned unopened to the Tenderers.

26.3 No Tender may be withdrawn, substituted, or modified in the interval between the deadline for submission of Tenders and the expiration of the period of Tender validity specified by the Tenderer on the Form of Tender or any extension thereof.

27. Tender Opening

27.1 Except in the cases specified in ITT 23 and ITT 26.2, the Procuring Entity shall publicly open and read out all Tenders received by the deadline, at the date, time and place specified in the **TDS**, in the presence of Tenderers' designated representatives who chooses to attend. Any specific electronic Tender opening procedures required if electronic Tendering is permitted in accordance with ITT 24.1, shall be as specified in the **TDS**.

27.2 First, envelopes marked "WITHDRAWAL" shall be opened and read out and the envelopes with the corresponding Tender shall not be opened but returned to the Tenderer. No Tender withdrawal shall be permitted unless the corresponding withdrawal notice contains a valid authorization to request the withdrawal and is read out at Tender opening.

27.3 Next, envelopes marked "SUBSTITUTION" shall be opened and read out and exchanged with the corresponding Tender being substituted, and the substituted Tender shall not be opened, but returned to the Tenderer. No Tender substitution shall be permitted unless the corresponding substitution notice contains a valid authorization to request the substitution and is read out at Tender opening.

27.4 Next, envelopes marked "MODIFICATION" shall be opened and read out with the corresponding Tender. No Tender modification shall be permitted unless the corresponding modification notice contains a valid authorization to request the modification and is read out at Tender opening.

27.5 Next, all remaining envelopes shall be opened one at a time, reading out: the name of the Tenderer and whether there is a modification; the total Tender Price, per lot (contract) if applicable, including any discounts and alternative Tenders; the presence or absence of a Tender Security or Tender-Securing Declaration, if required; and any other details as the Procuring Entity may consider appropriate.

27.6 Only Tenders, alternative Tenders and discounts that are opened and read out at Tender opening shall be considered further for evaluation. The Form of Tender and pages of the Bills of Quantities are to be initialed by the members of the tender opening committee attending the opening. The number of representatives of the Procuring Entity to sign shall be specified in the **TDS**.

27.7 At the Tender Opening, the Procuring Entity shall neither discuss the merits of any Tender nor reject any Tender (except for late Tenders, in accordance with ITT 25.1).

27.8 The Procuring **Entity shall prepare minutes of the Tender Opening that shall include, as a minimum:**

a) the name of the Tenderer and whether there is a withdrawal, substitution, or modification;
b) the Tender Price, per lot (contract) if applicable, including any discounts;
c) any alternative Tenders;
d) The presence or absence of a Tender Security, if one was required.
e) Number of pages of each tender document submitted.

27.9 The Tenderers' representatives who are present shall be requested to sign the minutes. The omission of a Tenderer's signature on the minutes shall not invalidate the contents and effect of the minutes. A copy of the tender opening register shall be distributed to all Tenderers upon request.

E. Evaluation and Comparison of Tenders

28. Confidentiality

28.1 Information relating to the evaluation of Tenders and recommendation of contract award shall not be disclosed to Tenderers or any other persons not officially concerned with the Tender process until information on Intention to Award the Contract is transmitted to all Tenderers in accordance with ITT 46.

28.2 Any effort by a Tenderer to influence the Procuring Entity in the evaluation of the Tenders or Contract award decisions may result in the rejection of its tender.

28.3 Notwithstanding ITT 28.2, from the time of tender opening to the time of contract award, if a tenderer wishes to contact the Procuring Entity on any **matter related to the tendering process, it shall do so in writing.**

29. Clarification of Tenders

29.1 To assist in the examination, evaluation, and comparison of the tenders, and qualification of the tenderers, the Procuring Entity may, at its discretion, ask any tenderer for a clarification of its tender, given a reasonable time for a response. Any clarification submitted by a tenderer that is not in response to a request by the Procuring Entity shall not be considered. The Procuring Entity's request for clarification and the response shall be in writing. No change, including any voluntary increase or decrease, in the prices or substance of the tender shall be sought, offered, or permitted, except to confirm the correction of arithmetic errors discovered by the Procuring Entity in the evaluation of the tenders, in accordance with ITT 33.

29.2 If a tenderer does not provide clarifications of its tender by the date and time set in the Procuring Entity's request for clarification, its Tender may be rejected.

30. Deviations, Reservations, and Omissions

30.1 During the evaluation of tenders, the following definitions apply:

a) "Deviation" is a departure from the requirements specified in the tender document;

b) "Reservation" is the setting of limiting conditions or withholding from complete acceptance of the requirements specified in the tender document; and

c) "Omission" is the failure to submit part, or all of the information or documentation required in the Tender document.

31. Determination of Responsiveness

31.1 The Procuring Entity's determination of a Tender's responsiveness is to be based on the contents of the tender itself, as defined in ITT 13.

31.2 A substantially responsive Tender is one that meets the requirements of the Tender document without material deviation**, reservation, or omission. A material deviation, reservation, or omission is one that, if accepted, would:**

a) affect in any substantial way the scope, quality, or performance of the Works specified in the Contract; or

b) limit in any substantial way, inconsistent with the tender document, the Procuring Entity's rights or the tenderer's obligations under the proposed contract; or

c) if rectified, would unfairly affect the competitive position of other tenderers presenting substantially responsive tenders.

31.3 The Procuring Entity shall examine the technical aspects of the tender submitted in accordance with ITT 18, to confirm that all requirements of Section VII, Works' Requirements have been met without any material deviation, reservation or omission.

31.4 If a tender is not substantially responsive to the requirements of the tender document, it shall be rejected by the Procuring Entity and may not subsequently be made responsive by correction of the material deviation, reservation, or omission.

32. Non-material non-conformities

32.1 Provided that a tender is substantially responsive, the Procuring Entity may waive any non-conformities in the tender.

32.2 Provided that a Tender is substantially responsive, the Procuring Entity may request that the tenderer submit the necessary information or documentation, within a reasonable period, to rectify nonmaterial non-conformities in the tender related to documentation

Requirements. Requesting information or documentation on such non- conformities shall not be related to any aspect of the price of the tender. Failure of the tenderer to comply with the request may result in the rejection of its tender.

32.3 Provided that a tender is substantially responsive, the Procuring Entity shall rectify quantifiable nonmaterial non-conformities related to the Tender Price. To this effect, the Tender Price shall be adjusted, for comparison purposes only, to reflect the price of a missing or non-conforming item or component in the manner specified in the **TDS.**

33. Arithmetical Errors

33.1 The tender sum as submitted and read out during the tender opening shall be absolute and final and shall not be the subject of correction, adjustment or amendment in any way by any person or entity.

33.2 Provided that the Tender is substantially responsive, the Procuring Entity shall handle errors on the following basis:

a) Any error detected if considered a major deviation that affects the substance of the tender, shall lead to disqualification of the tender as non-responsive.

b) Any errors in the submitted tender arising from a miscalculation of unit price, quantity, and subtotal and total bid price shall be considered as a major deviation that affects the substance of the tender and shall lead to disqualification of the tender as non-responsive. and

c) if there is a discrepancy between words and figures, the amount in words shall prevail

33.3 Tenderers shall be notified of any error detected in their bid during the notification of a ward.

34. Currency provisions

34.1 Tenders will priced be in Kenya Shillings only. Tenderers quoting in currencies other than in Kenya shillings will be determined non-responsive and rejected.

35. Margin of Preference and Reservations

35.1 No margin of preference shall be allowed on contracts for small works.

35.2 Where it is intended to reserve the contract to specific groups under Small and Medium Enterprises, or enterprise of women, youth and/or persons living with disability, who are appropriately registered as such by the authority to be specified in the **TDS**, a procuring entity shall ensure that the invitation to tender specifically indicates that only businesses/firms belonging to those specified groups are the only ones eligible to tender. Otherwise, if no so stated, the invitation will be open to all tenderers.

36. Nominated Subcontractors

36.1 Unless otherwise stated in the **TDS**, the Procuring Entity does not intend to execute any specific elements of the Works by subcontractors selected in advance by the Procuring Entity.

36.2 Tenderers may propose subcontracting up to the percentage of total value of contracts or the volume of works as specified in the **TDS**. Subcontractors proposed by the Tenderer shall be fully qualified for their parts of the Works.

36.3 The subcontractor's qualifications shall not be used by the Tenderer to qualify for the Works unless their specialized parts of the Works were previously designated by the Procuring Entity in the **TDS** as can be met by subcontractors referred to hereafter as 'Specialized Subcontractors', in which case, the qualifications of the Specialized Subcontractors proposed by

the Tenderer may be added to the qualifications of the Tenderer.

37. Evaluation of Tenders

37.1 The Procuring Entity shall use the criteria and methodologies listed in this ITT and Section III, Evaluation and Qualification Criteria. No other evaluation criteria or methodologies shall be permitted. By applying the criteria and methodologies the Procuring Entity shall determine the Best Evaluated Tender in accordance with ITT 40.

37.2 To evaluate a Tender, the Procuring Entity shall consider the following:

a) price adjustment due to discounts offered in accordance with ITT 16;
b) converting the amount resulting from applying (a) and (b) above, if relevant, to a single currency in accordance with ITT39;
c) price adjustment due to quantifiable nonmaterial non-conformities in accordance with ITT 30.3; and
d) any additional evaluation factors specified **in the TDS** and Section III, Evaluation and Qualification Criteria.

37.3 The estimated effect of the price adjustment provisions of the Conditions of Contract, applied over the period of execution of the Contract, shall not be considered in Tender evaluation.

37.4 In the case of multiple contracts or lots, Tenderers shall be allowed to tender for one or more lots and the methodology to determine the lowest evaluated cost of the lot (contract) combinations, including any discounts offered in the **Form of Tender, is specified in Section III, Evaluation and Qualification Criteria.**

38. Comparison of Tenders

38.1 The Procuring Entity shall compare the evaluated costs of all substantially responsive Tenders established in accordance with ITT 38.2 to determine the Tender that has the lowest evaluated cost.

39. Abnormally Low Tenders

39.1 An Abnormally Low Tender is one where the Tender price, in combination with other elements of the Tender, appears so low that it raises material concerns as to the capability of the Tenderer in regard to the Tenderer's ability to perform the Contract for the offered Tender Price or that genuine competition between Tenderers is compromised.

39.2 In the event of identification of a potentially Abnormally Low Tender, the Procuring Entity shall seek written clarifications from the Tenderer, including detailed price analyses of its Tender price in relation to the subject matter of the contract, scope, proposed methodology, schedule, allocation of risks and responsibilities and any other requirements of the Tender document.

39.3 After evaluation of the price analyses, in the event that the Procuring Entity determines that the Tenderer has failed to demonstrate its capability to perform the Contract for the offered Tender Price, the Procuring Entity shall reject the Tender.

40. Abnormally High Tenders

40.1 An abnormally high price is one where the tender price, in combination with other constituent elements of the Tender, appears unreasonably too high to the extent that the Procuring Entity is concerned that it (the Procuring Entity) may not be getting value for money, or it may be paying too high a price for the contract compared with market prices or that genuine competition between Tenderers is compromised.

40.2 In case of an abnormally high tender price, the Procuring Entity shall make a survey of the market prices, check if the estimated cost of the contract is correct and review the Tender Documents to check if the specifications, scope of work and conditions of contract are contributory to the abnormally high tenders. The Procuring Entity may also seek written clarification from the tenderer on the reason for the high tender price. The Procuring Entity shall proceed as follows:

i)If the tender price is abnormally high based on wrong estimated cost of the contract, the Procuring Entity may accept or not accept the tender depending on the Procuring Entity's budget considerations.

ii) If specifications, scope of work and/or conditions of contract are contributory to the abnormally high tender prices, the Procuring Entity shall reject all tenders and may retender for the contract based on revised estimates, specifications, scope of work and conditions of contract, as the case may be.

40.3 If the Procuring Entity determines that the Tender Price is abnormally too high because genuine competition between tenderers is compromised (*often due to collusion, corruption or other manipulations*), the Procuring Entity shall reject all Tenders and shall institute or cause competent Government Agencies to institute an investigation on the cause of the compromise, before retendering**.**

41. Unbalanced and/or Front-Loaded Tenders

41.1 If in the Procuring Entity's opinion, the Tender that is evaluated as the lowest evaluated price is seriously unbalanced and/or front loaded, the Procuring Entity may require the Tenderer to provide written clarifications. Clarifications may include detailed price analyses to demonstrate the consistency of the tender prices with the scope of works, proposed methodology, schedule and any other requirements of the Tender document.

41.2 After the evaluation of the information and detailed price analyses presented by the Tenderer, the Procuring Entity may as appropriate:

a) accept the Tender; or

b) require that the total amount of the Performance Security be increased at the expense of the Tenderer to a level not exceeding a 30% of the Contract Price; or

c) agree on a payment mode that eliminates the inherent risk of the Procuring Entity paying too much for undelivered works;or

d) reject the Tender,

42. Qualifications of the Tenderer

42.1 The Procuring Entity shall determine to its satisfaction whether the eligible Tenderer that is selected as having submitted the lowest evaluated cost and substantially responsive Tender, meets the qualifying criteria specified in Section III, Evaluation and Qualification Criteria.

42.2 The determination shall be based upon an examination of the documentary evidence of the Tenderer's qualifications submitted by the Tenderer, pursuant to ITT 19. The determination shall not take into consideration the qualifications of other firms such as the

Tenderer's subsidiaries, parent entities, affiliates, subcontractors (other than Specialized Subcontractors if permitted in the Tender document), or any other firm(s) different from the Tenderer.

42.3 An affirmative determination shall be a prerequisite for award of the Contract to the Tenderer. A negative determination shall result in disqualification of the Tender, in which event the Procuring Entity shall proceed to the Tenderer who offers a substantially responsive Tender with the next lowest evaluated price to make a similar determination of that Tenderer's qualifications to perform satisfactorily.

42.4 An Abnormally Low Tender is one where the Tender price, in combination with other elements of the Tender, appears so low that it raises material concerns as to the capability of the Tenderer in regard to the Tenderer's ability to perform the Contract for the offered Tender Price.

42.5 In the event of identification of a potentially Abnormally Low Tender, the Procuring Entity shall seek written clarifications from the Tenderer, including detailed price analyses of its Tender price in relation to the subject matter of the contract, scope, proposed methodology, schedule, allocation of risks and responsibilities and any other requirements of the Tender document.

42.6 After evaluation of the price analyses, if the Procuring Entity determines that the Tenderer has failed to demonstrate its capability to perform the Contract for the offered Tender Price, the Procuring Entity shall reject the Tender.

43. Best Evaluated Tender

43.1 Having compared the evaluated prices of Tenders, the Procuring Entity shall determine the Best Evaluated Tender. The Best Evaluated Tender is the Tender of the Tenderer that meets the Qualification Criteria and who's Tender has been determined to be:

a) Most responsive to the Tender document; and

b) The lowest evaluated price.

44. Procuring Entity's Right to Accept Any Tender, and to Reject Any or All Tenders.

44.1 The Procuring Entity reserves the right to accept or reject any Tender and to annul the Tender process and reject all Tenders at any time prior to Contract Award, without thereby incurring any liability to Tenderers. In case of annulment, all Tenderers shall be notified with reasons and all Tenders submitted and specifically, Tender securities, shall be promptly returned to the Tenderers.

F. Award of Contract

45. Award Criteria

45.1 The Procuring Entity shall award the Contract to the successful tenderer whose tender has been determined to be the Lowest Evaluated Tender.

46. Notice of Intention to enter into a Contract

46.1 Upon award of the contract and prior to the expiry of the Tender Validity Period the Procuring Entity shall issue a Notification of Intention to Enter into a Contract / Notification of award to all tenderers which shall contain, at a minimum, the following information:

a) the name and address of the Tenderer submitting the successful tender;

b) the Contract price of the successful tender;

c) a statement of the reason(s) the tender of the unsuccessful tenderer to whom the letter is addressed was unsuccessful, unless the price information in (c) above already reveals the reason;

d) the expiry date of the Standstill Period; and

e) instructions on how to request a debriefing and/or submit a complaint during the standstill period;

47. Standstill Period

47.1 The Contract shall not be signed earlier than the expiry of a Standstill Period of 14 days to allow any dissatisfied tender to launch a complaint. Where only one Tender is submitted, the Standstill Period shall not apply.

47.2 Where a Standstill Period applies, it shall commence when the Procuring Entity has transmitted to each Tenderer the Notification of Intention to Enter **into a Contract with the successful Tenderer.**

48. Debriefing by the Procuring Entity

48.1 On receipt of the Procuring Entity's Notification of Intention to Enter into a Contract referred to in ITT 46, an unsuccessful tenderer may make a written request to the Procuring Entity for a debriefing on specific issues or concerns regarding their tender. The Procuring Entity shall provide the debriefing within five days of receipt of the request.

48.2 Debriefings of unsuccessful Tenderers may be done in writing or verbally. The Tenderer shall bear its own costs of attending **such a debriefing meeting.**

49. Letter of Award

49.1 Prior to the expiry of the Tender Validity Period and upon expiry of the Standstill Period specified in ITT 42.1, upon addressing a complaint that has been filed within the Standstill Period, the Procuring Entity shall transmit the Letter of Award to the successful Tenderer. The letter of award shall request the successful tenderer to furnish the Performance Security within 21days of the date of the letter.

50. Signing of Contract

50.1 Upon the expiry of the fourteen days of the Notification of Intention to enter into contract and upon the parties meeting their respective statutory requirements, the Procuring Entity shall send the successful Tenderer the Contract Agreement.

50.2 Within fourteen (14) days of receipt of the Contract Agreement, the successful Tenderer shall sign, date, and return it to the Procuring Entity.

50.3 The written contract shall be entered into within the period specified in the notification of award and before expiry of the tender validity period

51. Appointment of Adjudicator

51.1 The Procuring Entity proposes the person named in the TDS to be appointed as Adjudicator under the Contract, at the hourly fee specified in the TDS, plus reimbursable Expenses. If the Tenderer disagrees with this proposal, the Tenderer should so state in his Tender. If, in the Letter of Acceptance, the Procuring Entity does not agree on the appointment of the Adjudicator, the Procuring Entity will request the Appointing Authority designated in the Special Conditions of Contract (SCC) pursuant to Clause 23.1 of the General Conditions of Contract (GCC), to appoint the Adjudicator.

52. Performance Security

52.1 Within twenty-one (21) days of the receipt of the Letter of Acceptance from the Procuring Entity, the successful Tenderer shall furnish the Performance Security and, any other documents required in the **TDS**, in accordance with the General Conditions of Contract, subject to ITT 40.2 (b), using the Performance Security and other Forms included in Section X, Contract Forms, or another form acceptable to the Procuring Entity. A foreign institution providing a bank guarantee shall have a correspondent financial institution located in Kenya, unless the Procuring Entity has agreed in writing that a correspondent bank is not required.

52.2 Failure of the successful Tenderer to submit the above-mentioned Performance Security and other documents required in the **TDS**, or sign the Contract shall constitute sufficient grounds for the annulment of the award and forfeiture of the Tender Security. In that event the Procuring Entity may award the Contract to the Tenderer offering the next Best Evaluated Tender.

52.3 Performance security shall not be required for contracts estimated to cost less than Kenya shillings five million shillings**.**

53. Publication of Procurement Contract

53.1 Within fourteen days after signing the contract, the Procuring Entity shall publish the awarded contract at its notice boards and websites; and on the Website of the Authority. At the minimum, the notice shall contain the following information:

a) name and address of the Procuring Entity;

b) name and reference number of the contract being awarded, a summary of its scope and the selection method used;

c) The name of the successful Tenderer, the final total contract price, the contract duration.

d) dates of signature, commencement and completion of contract;

e) Names of all Tenderers that submitted Tenders, and their Tender prices as read out at Tender opening.

54. Procurement Related Complaints and Administrative Review

54.1 The procedures for making Procurement-related Complaints are as specified in the **TDS**.

54.2 A request for administrative review shall be made in the form provided under contract forms.

SECTION II-TENDER DATA SHEET (TDS)

The following specific data shall complement, supplement, or amend the provision in the Instruction to Tenders (ITT). Whenever there is a conflict, the provisions herein shall prevail over those in ITT.

A. General	
ITT 1.1	**The name of the Contract is: PROPOSED BURBURIS WATER CONNECTIONS AT GALBERT WARD IN GARISSA COUNTY** **The reference number of the Contract is:** **TENDER NO CGG/T/WS/09/2025-2026** **The number and identification of lots (contracts) comprising the Tender are; N/A**
ITT 2.3	The information made available on competing firms is as follows**: NONE**
ITT 2.4	The firms that provided consulting services for the contract being tendered for are:
ITT 3.1	Maximum number of members in the Joint Venture (JV) shall be; **N/A**
B. Contents of Tender Document	
ITT 8.1	A pre-arranged pretender site visit shall take place on**:** Pre-Tender meeting **shall not** take place
ITT 8.2	(i) The Tenderer will submit any request for clarifications in writing at the Address To reach the Procuring Entity not later than (ii) The Procuring Entity shall send its response through email to all the registered tenderers who provided their contacts on showing interest in the tender
ITT 8.4	The Procuring Entity's website where Minutes of the pre-Tender meeting and the pre-arranged pretender site visit will be published is; _**N/A**_____
ITT 9.1	For Clarification of Tender purposes, for obtaining further information and for purchasing tender documents, the Procuring Entity's address is: (1) Name of Procuring Entity; (2) Physical address for hand Courier Delivery to an office or Tender Box (City, Street, Building, Floor Number and Room) (3) Postal Address; (4) **For Clarification of bid purposes only**, Address: Director, Supply Chain Management Street: Along Lamu road Town: Garissa Country: Kenya

C. Preparation of Tenders	
ITP 13.1 (h)	The Tenderer shall submit the following additional documents in its Tender: **NONE**
ITT 15.1	Alternative Tenders **SHALL NOT BE** considered
ITT 15.2	Alternative times for completion **SHALL NOT BE** permitted
ITT 15.4	Alternative technical solutions shall be permitted for the following parts of the Works: **NONE**
ITT 16.5	The prices quoted by the Tenderer shall be: **FIXED**
ITT 20.1	The Tender validity period shall be **150 days.**
ITT 20.3 (a)	(a) The Number of days beyond the expiry of the initial tender validity period will be 150 days. (b) The Tender price shall be adjusted by the following percentages of the tender price: (i) By 0%the local currency portion of the Contract price adjusted to reflect local inflation during the period of extension, and (ii) By 0% the foreign currency portion of the Contract price adjusted to reflect the international inflation during the period of extension.
ITT 21.1	Tenderer shall fill the Tender Securing Declaration Form
ITT 21.2 (d)	The other Tender Security shall be **NONE**
ITT 21.5	On the Performance Security, other documents required shall be **INSURANCE CERTIFICATES**
ITT 22.1	In addition to the **Original** of the Tender, the number of copies is: **ONE COPY**
ITT 22.3	The written confirmation of authorization to sign on behalf of the Tenderer shall consist of: ***POWER OF ATTORNEY COMMISSIONED BY A COMMISSIONER FOR OATHS***
D. Submission and Opening of Tenders	
ITT 24.1	(A) For Tender submission purposes only, the Procuring Entity's address is: (1) Name of Procuring Entity: (2) Postal Address at former Garissa municipal, **Garissa, off Kismayu road.** (3) Date and time for submission of Tenders: **As per letter of invitation to tender** (4) Tenderers **SHALL NOT SUBMIT** tenders electronically.
ITT 27.1	The Tender opening shall take place at the time and the address for Opening of Tenders Provided below: (1) Name of Procuring Entity: Physical address for the location (City, Street, Building, Floor Number and Room) Physical address for hand Courier Delivery to an office or Tender Box (City, Street, Building, Floor Number and Room) **Urban planning office**, **Located** at former Garissa municipal, Garissa. (2) State date and time of tender opening. **As per letter of invitation to tender**

ITT 27.1	If Tenderers are allowed to submit Tenders electronically, they shall follow the electronic tender submission procedures specified below: **N/A**

ITT 27.6	The number of representatives of the Procuring Entity to sign is **Three [3].**
E. Evaluation, and Comparison of Tender	
ITT 32.3	The adjustment shall be based on the **N/A** [insert "average" or "highest"} price of the item or Component as quoted in other substantially responsive Tenders. If the price of the item or component cannot be derived from the price of other substantially responsive Tenders, the Procuring Entity shall use its best estimate.
ITT 35.2	The invitation to tender is extended to the following groups that qualify for Reservations **OPEN NATIONAL COMPETITIVE BIDDING**
ITT 36.1	At this time, the Procuring Entity **DOES NOT INTEND** to execute certain specific parts of The Works by subcontractors selected in advance.
ITT 36.2	Contractor's may propose subcontracting: Maximum percentage of subcontracting permitted Is: 10 % of the total contract amount. Tenderers planning to subcontract more than 10% of total volume of work shall specify, in the Form of Tender, the activity (ies) or parts of the Works to be subcontracted along with complete details of the subcontractors and them Qualification and experience.
ITT 36.3	The parts of the Works for which the Procuring Entity permits Tenderers to propose Specialized Subcontractors are designated as follows: For the above-designated parts of the Works that may require Specialized Subcontractors, the Relevant qualifications of the proposed Specialized Subcontractors will be added to the Qualifications of the Tenderer for the purpose of evaluation.
ITT 37.2 (d)	Additional requirements apply. These are detailed in the evaluation criteria in Section III, Evaluation and Qualification Criteria.
ITT 51.1	The person named to be appointed as Adjudicator is ***A nominee by the Chartered Institute of Arbitrators, Kenya branch*** The hourly fee for Adjudicator shall be capped at: KES 25,000/=

ITT 52.2	Other documents required are; - a) Copies of original documents defining the constitution or legal status, place of registration, and principal, place of business; written power of attorney authorizing the signatory of the Tender to commit the Tenderer. b) The minimum required annual volume of construction work for the successful Tenderer in any of the last 2 years shall be: Kenya Shillings Twenty Million, (KES.20, 000,000). c) Experience as prime contractor in the construction of at least one project of a nature and complexity equivalent to the Works, for the last 2 years or the period stated in b) above (to comply with this requirement, works cited should be at least 70 percent complete). d) The essential equipment to be made available for the Contract by the successful Tenderer (proposals for timely acquisition or own, lease, hire, etc) shall be: **1.** DRILLING RIG **2.** PICK UP-TRUCK **3.** EXCAVATOR/BACKHOE **4.** LORRY **5.** ASSORTED PLUMBING TOOLS e) A Site Agent with a minimum of 5(FIVE) years' experience in works of an equivalent nature and volume. f) Evidence of adequate working capital for this contract. g) Information regarding litigation, current h) Method Statement i) Cash flow Statements
ITT 54.1	The procedures for making a Procurement-related Complaints are detailed in the "Regulations" available from the PPRA Website www.ppra.go.ke or email complaints@ppra.go.ke . If a Tenderer wishes to make a Procurement-related Complaint, the Tenderer should submit its complaint following these procedures, in writing (by the quickest means available, that is either by hand delivery or email to: For the attention: *[insert full name of person receiving complaints]* Title/position: *[insert title/position]* Procuring Entity: Email address: info@garissa.go.ke In summary, a Procurement-related Complaint may challenge any of the following: (i) the terms of the Tender Documents; and (ii) The Procuring Entity's decision to award the contract.

SECTION III - EVALUATION AND QUALIFICATION CRITERIA

After tender opening, the tenders will be evaluated in 4 stages, namely:

Preliminary examination.
Detailed Technical Examination.
Financial Evaluation.
Recommendation for award

1. STAGE 1-PRELIMINARY EXAMINATION

This stage of evaluation shall involve examination of the pre-qualification conditions as set out in the Tender Advertisement Notice or Letter of Invitation to Tender and any other conditions stated in the bid document.

ITEM	MANDATORY REQUIREMENT (MR)	MUST SUBMIT(YES/NO)
MR 1	Submit a copy of valid company's Certificate of Registration/ Incorporation	**YES**
MR 2	Must provide copy of valid Tax Compliance certificate or tax exemption certificate issued by the Kenya Revenue Authority	**YES**
MR 3	Must Submit a completed company's profile and a copy of CR12/CR13 from issued by the Registrar of companies (Not older than 6 Months)	**YES**
MR 4	Must attach the current business permit/Trade License from the county government.	**YES**
MR 5	Attach Relevant trade current registration certificate & practicing License from (NCA) in Water Works - category **NCA 4 and Above and NCA Category 6 and above in Electromechanical.**	**YES**
MR 6	**Must attach a duly filled, signed and stamped** Form of Tender in the format provided	**YES**
	Must fill and submit the Tenderer's Eligibility-Confidential Business Questionnaire in the format provided	**YES**
	Must fill and submit the Certificate of Independent Tender Determination in the format provided	**YES**
	Must fill and submit the Self-declaration form that the person/tenderer is Not debarred in the matter of the Public Procurement and Asset Disposal Act 2015 in the format provided - Form SD1.	**YES**
	Must fill and submit the Self-declaration form that the person/tenderer will not engage in any corrupt or fraudulent practice in the format provided - Form SD2	**YES**
	Must fill and submit the Self declaration and commitment to the code of Ethics in the format provided Self-Declaration of the Tenderer: - Form SD3.	**YES**
MR7	All Tenders must be accompanied by a tender Security of **Kshs. 4,000,000.00 (Kenya Shillings Four Million Only)** in the form of: - a) Cash b) A bank guarantee c) A guarantee by an insurance company registered and licensed by the Insurance Regulatory Authority listed by the Authority d) A guarantee issued by a Financial Institution Approved and Licensed by the Central Bank of Kenya	**YES**
MR 8	Must Submit Fill the Tender Securing Declaration Form.	**YES**
MR 9	Must submit **one original** copy of the Tender Document and **one copy.** Submission of Original and Copy (all Volumes) in the format required by the procuring entity and all the tender document (all volumes) to be TAPE/BOOK (Use of Spring or box files will not be accepted and will lead to automatic disqualification;	**YES**
MR 10	Must fill and submit Form CON–2 Historical Contract Non-Performance and Pending Litigation in the Format Provided.	**YES**
MR 11	Must fill and submit his/her tender document as follows: - The tender must be downloaded as issued without altering the format- both original and the copy and shall written in indelible ink and be signed by an Authorized person	**YES**

MR 11	The Authorized person to sign the tender on behalf of the tenderer and **mus**t sign or Initialized all the pages of the Tender where entries (i.e., all the forms, priced Bills of Quantities) or amendments have been made.	**YES**
	The entire/complete original and copy (including attachments) Must be serialized/paginated using a numbering machine, handwritten pagination will be deemed non-responsive	**YES**
	In case the Tenderer is a JV, the Tender shall be signed by an authorized representative of the JV on behalf of the JV, and so as to be legally binding on all the members as evidenced by a power of attorney signed by their legally authorized representatives.	**YES**
MR 12	Tenderer must fill **Form ELI-1**: -Tenderer Information Form and must attach copies of original documents of the below listed where applicable as instructed: - Articles of Incorporation (or equivalent documents of constitution or association), and or documents of registration of the legal entity named above, in accordance with ITT4.1.4	**YES**
	Include organizational chart, Board of Directors and Beneficial ownership	**YES**
	In case of JV, form of intent to form JV or JV agreement, in accordance with ITT4.1.6	**YES**
	In case of state-owned enterprise or institution, in accordance with ITT 4.1.6 documents establishing	**YES**
MR 13	Power of attorney/ Authorization Letter duly signed (should be signed by directors appearing in CR12/13) or by the director of the firm with the highest shares, giving the name of person who has been authorized to submit/execute this agreement as a binding document and this person should sign all the documents related to this tender.	**YES**
MR 14	Must submit duly filled and stamped **Tenderers Qualification without Prequalification form 5.1**	**YES**
MR 15	Main Contractor must attach duly signed and stamped pre-contract agreement to work together with the Domestic Sub-Contractors Not Joint Venture if awarded the Tender (where Applicable). (The agreement should be signed by both parties for it to be valid)	**YES**
MR 16	Must submit a detailed works program for the works	**YES**
MR 17	Must submitted tender securing declaration form as format provided by PPRA	**YES**

The employer may seek further clarification/confirmation, if necessary, to confirm authenticity/ compliance of any condition of the tender.

The tenderers who do not satisfy any of the above requirements shall be considered non-responsive and their tenders including those of their subcontractors will not be evaluated further.

Note:

On compliance with Technical Specifications, bidders shall supply equipment/items which comply with the technical specifications set out in the bid document. In this regard, the bidder will be required to submit relevant technical brochure/catalogues with the tender document, highlighting (using a mark-pen or highlighter) the Catalogue Number/model of the proposed items. Such brochures/ catalogues should indicate comprehensive relevant data of the proposed equipment/items which should include but not limited to the following:

Standards of manufacture;

Performance ratings/characteristics;

(iii)Material of manufacture;

Electrical power ratings; and

All other requirements as indicated in the technical specifications of the bid.

The bids will then be analyzed, using the information in the technical brochures, to determine compliance with technical specifications for the works/items as indicated in the tender document. Bidders not complying with any of the technical specifications shall be adjudged technically non-responsive while those meeting all technical specifications shall be considered technically responsive.

The tenderer shall also fill in the Technical Schedule as specified in the tender document for Equipment and Items indicating the Country of Origin, Model/Make/Manufacturer and catalogue numbers of the Items/Equipment they propose to supply.

a. Any bidder whose Sub Contractor are Nonresponsive at this stage shall not be evaluated further

2. STAGE 2: TECHNICAL EVALUATION

Evaluation of the Main Contractor and Domestic Sub- Contractors

The award of points for the **STANDARD FORMS** considered in this section shall be as shown below:

	PARAMETER	**MAXIMUM POINTS**
(i)	Key personnel	20
(ii)	Contract Completed in the last Five (5) years----------	20
(iii)	Schedules of on-going projects ----------	5
(iv)	Schedules of contractor's equipment----------	20
(v)	Audited Financial Report for the last 3 years----------	15
(vi)	Evidence of Financial Resources ----------	15
(vii)	Name, Address and Telephone of Banks (Contractor to provide) -----	2
(viii)	Litigation History	3
	TOTAL	**100**

Note: -

The Main Contractor MUST ensure that sub-contractors provide requirements for Domestic Subcontracting in the **Key Personnel, Completed and Ongoing Projects** to incorporate in Technical Evaluation.

The detailed scoring plan shall be as shown in table1 below: -

TABLE1: Assessment for Eligibility (Main Contractor and Domestic Sub- Contractors)

<table>
<tr><th>Item</th><th>Description</th><th>Point Scored</th><th colspan="2">Max. Point</th></tr>
<tr><td rowspan="4">I</td><td>Key Personnel (Attach evidence)</td><td></td><td></td><td rowspan="4">20</td></tr>
<tr><td>K 1-Project Manager (Degree/diploma in Civil, Water, Electrical or Mechanical Engineering Related Field)

<table>
<tr><th>Experience / Qualification</th><th>Over 10 years [2.5]</th><th>Over 5 years [1]</th><th>Under 5 years [0.5]</th><th>No Relevant [0]</th></tr>
<tr><td>Degree [2.5]</td><td></td><td></td><td></td><td></td></tr>
<tr><td>Diploma [1]</td><td></td><td></td><td></td><td></td></tr>
<tr><td>Certificate [0.5]</td><td></td><td></td><td></td><td></td></tr>
<tr><td>No Relevant [0]</td><td></td><td></td><td></td><td></td></tr>
<tr><td></td><td></td><td></td><td></td><td></td></tr>
</table></td><td></td><td>5</td></tr>
<tr><td>K 2 -Site Agent (Degree/diploma in Civil, Water, Electrical or Mechanical Engineering Related Field)
- Main and Sub-Contractors’.
<table>
<tr><th>Experience / Qualification</th><th>Over 10 years [3]</th><th>Over 5 years [1]</th><th>Under 5 years [0.5]</th><th>No Relevant [0]</th></tr>
<tr><td>Degree [3]</td><td></td><td></td><td></td><td></td></tr>
<tr><td>Diploma [1]</td><td></td><td></td><td></td><td></td></tr>
<tr><td>Certificate [0.5]</td><td></td><td></td><td></td><td></td></tr>
<tr><td>No Relevant [0]</td><td></td><td></td><td></td><td></td></tr>
<tr><td></td><td></td><td></td><td></td><td></td></tr>
</table></td><td></td><td>6</td></tr>
<tr><td>K 3 -Foreman. (Degree/diploma in Civil, Water, Electrical or Mechanical Engineering Related Field)
- Main and Sub-Contractors’.
<table>
<tr><th>Experience / Qualification</th><th>Over 10 years [3]</th><th>Over 5 years [1]</th><th>Under 5 years [0.5]</th><th>No Relevant [0]</th></tr>
<tr><td>Degree [3]</td><td></td><td></td><td></td><td></td></tr>
<tr><td>Diploma [1]</td><td></td><td></td><td></td><td></td></tr>
<tr><td>Certificate [0.5]</td><td></td><td></td><td></td><td></td></tr>
<tr><td>No Relevant [0]</td><td></td><td></td><td></td><td></td></tr>
<tr><td></td><td></td><td></td><td></td><td></td></tr>
</table></td><td></td><td>6</td></tr>
<tr><td>K 4 At least 3No artisan (trade test certificate in relevant Engineering field) – (Building, Civil, Water, Electrical or Mechanical Engineering Construction Related Field)
– Main and Sub Contractors’.

K4-1
<table>
<tr><th>Experience / Qualification</th><th>Over 10 years [0.5]</th><th>Over 5 years [.25]</th><th>Under 5 years [0.1]</th><th>No Relevant [0]</th></tr>
<tr><td>Diploma [0.5]</td><td></td><td></td><td></td><td></td></tr>
<tr><td>Certificate [0.25]</td><td></td><td></td><td></td><td></td></tr>
<tr><td>No Relevant [0]</td><td></td><td></td><td></td><td></td></tr>
<tr><td></td><td></td><td></td><td></td><td></td></tr>
</table>
K4-2</td><td></td><td>3</td></tr>
</table>

	Experience / **Qualification**	Over 10 years [0.5]	Over 5 years [.25]	Under 5 years [0.1]	No Relevant [0]				
	Diploma [0.5]								
	Certificate [0.25]								
	No Relevant [0]								
	K4-3								
	Experience / **Qualification**	Over 10 years [0.5]	Over 5 years [.25]	Under 5 years [0.1]	No Relevant [0]				
	Diploma [0.5]								
	Certificate [0.25]								
	No Relevant [0]								
Ii	Contract completed in the last five (5) years (Max of 5No. Projects, 3 from Main Contractor and 1 No. each from each of the 2 Sub-Contract Works)-**Provide Evidence (Attach Award letter, Contract Agreement and Completion Certificate)** • Project of similar nature, complexity or magnitude ---------- 4 • Project of similar nature but of lower value than the one in consideration ------ 2 • No completed project of similar nature ---------- 0							**20**	
Iii	On-going projects including Sub/Contracts – **Provide Evidence (Award letter and Contract Agreement)** • One Project of similar nature, complexity and magnitude - (Attach Proof) ----- 1 •Two and below Projects of similar, nature complexity and magnitude --- 2 •Four and above Projects of similar nature, complexity and magnitude ---- 5							**5**	
Iv	Schedule of contractor's equipment and transport **(proof or evidence of ownership/Lease)** – Main Contractor a) Relevant Transport (pick- ups, lorries, trucks- at least 2 no.) • Means of transport (Vehicles) ---------- 10 • No means of transport---------- 0							**10**	**20**
	b) Relevant Tools and Equipment **(sub-contractors) at least 5 no.)** • Has relevant equipment for work being tendered -------- 10 • No relevant equipment for work being tendered--------- 0 Owned is 2 marks each and leased 1 mark							**10**	
V	**Financial report (Main Contractor)** a) Average Annual Turnover **(From Audited Accounts for the last 3 years -, (2023, 2024 and 2025 for Main Contractor only** • Average Annual Turn-over equal to or greater than the cost of the project ---------- 15 •Average Annual Turn-over above 50% but below100%of the cost of the project.....9 • Average Annual Turn-over below 50% of the cost of the project ------- 3 • No audited Financial Statements attached---------- 0							**15**	

	b) Evidence of Financial Resources (cash in hand, lines of credit, overdraft facility etc.)- **Bank/Creditors/Letters dated not earlier than May 2026)** Has financial resources to finance the projected monthly Cash flow *for three months - 15 Has financial resources equal to the projected monthly cash flow* ------- 10 Has financial resources less the projected monthly cash flow* ----------5 Has not indicated sources of financial resources---------- 0		**15**
Vi	Bank Details and letter of authorization to seek authority from the bank **(Main Contractor)** •Attached ---------- 2 Not Attached 0----------		**2**
Vii	Litigation History/Affidavit signed and Stamped by an Attorney/Commissioner for Oaths **(Main Contractor)** • Attached ---------- 3 Not attached 0 ----------		**3**
	TOTAL		**100**

Any bidder who scores 70 points and above shall be considered for further evaluation

Notes on evaluation

**Monthly Cash Flow =Tender Sum/Contract Period*

The Bidder must demonstrate that it will have access to the key Contractor's equipment listed hereafter:

3. STAGE 3: FINANCIAL EVALUATION.

Upon completion of the technical evaluation a detailed financial evaluation shall follow. The financial evaluation shall proceed in the manner described in the Public Procurement and Asset Disposal Act (2015).

The evaluation shall be in three stages

Determination of the Corrected Tender Sums;
Comparison of Rates for major components of Works; and
Consistency of the Rates

Bidder	Bidder's price (Form of Tender)	Error	ECF (%)	Ranking
1				
2				

4. STAGE 4 –RECOMMENDATION FOR AWARD

Award Criteria:

The firm achieving the lowest evaluated price will be awarded the contract in line with Section 86 of the Public Procurement and Disposal Act, 2015

SECTION IV - TENDERING FORMS

QUALIFICATION FORMS

1. FOREIGN TENDERERS 40%RULE

Pursuant to ITT 3.9, a foreign tenderer must complete this form to demonstrate that the tender fulfils this condition.

ITEM	Description of Work Item	Describe location of Source	COST in K. shillings	Comments, if any
A	Local Labor			
1				
2				
3				
4				
5				
B	Sub contracts from Local sources			
1				
2				
3				
4				
5				
C				
1				
2				
3				
4				
5				
D				
1				
2				
3				
4				
5				
E				
1				
2				
3				
4				
5				
6				

2. FORM EQU: EQUIPMENT

The Tenderer shall provide adequate information to demonstrate clearly that it has the capability to meet the requirements for the key equipment listed in Section III, Evaluation and Qualification Criteria. A separate Form shall be prepared for each item of equipment listed, or for alternative equipment proposed by the Tenderer.

Item of equipment		
Equipment information	Name of manufacturer	Model and power rating
	Capacity	Year of manufacture
Current status	Current location	
	Details of current commitments	
Source	Indicate source of the equipment ☐ Owned ☐ Rented ☐ Leased ☐ Specially manufactured	

Omit the following information for equipment owned by the Tenderer.

Owner	Name of owner	
	Address of owner	
	Telephone	Contact name and title
	Fax	Telex
Agreements	Details of rental / lease / manufacture agreements specific to the project	

3. FORM PER -1

Contractor's Representative and Key Personnel Schedule

Tenderers should provide the names and details of the suitably qualified Contractor's Representative and Key Personnel to perform the Contract. The data on their experience should be supplied using the Form PER-2 below for each candidate.

Contractor' Representative and Key Personnel

1.	**Title of position: Contractor's Representative**	
	Name of candidate:	
	Duration of appointment:	[*insert the whole period (start and end dates) for which this position will be engaged*]
	Time commitment: for this position:	[*insert the number of days/week/months/ that has been scheduled for this position*]
	Expected time schedule for this position:	[*insert the expected time schedule for this position (e.g. attach high level Gantt chart*]
2.	**Title of position:** *[ ]*	
	Name of candidate:	
	Duration of appointment:	[*insert the whole period (start and end dates) for which this position will be engaged*]
	Time commitment: for this position:	[*insert the number of days/week/months/ that has been scheduled for this position*]
	Expected time schedule for this position:	[*insert the expected time schedule for this position (e.g. attach high level Gantt chart*]
3.	**Title of position:** *[ ]*	
	Name of candidate:	
	Duration of appointment:	[*insert the whole period (start and end dates) for which this position will be engaged*]
	Time commitment: for this position:	[*insert the number of days/week/months/ that has been scheduled for this position*]
	Expected time schedule for this position:	[*insert the expected time schedule for this position (e.g. attach high level Gantt chart*]
4.	**Title of position:** *[ ]*	
	Name of candidate:	
	Duration of appointment:	[*insert the whole period (start and end dates) for which this position will be engaged*]
	Time commitment: for this position:	[*insert the number of days/week/months/ that has been scheduled for this position*]
	Expected time schedule for this position:	[*insert the expected time schedule for this position (e.g. attach high level Gantt chart*]
5.	**Title of position:** *[insert title]*	
	Name of candidate	
	Duration of appointment:	[*insert the whole period (start and end dates) for which this position will be engaged*]
	Time commitment: for this position:	[*insert the number of days/week/months/ that has been scheduled for this position*]
	Expected time schedule for this position:	[*insert the expected time schedule for this position (e.g. attach high level Gantt chart*]

4. FORM PER-2:

Resume and Declaration - Contractor's Representative and Key Personnel.

Summarize professional experience in reverse chronological order. Indicate particular technical and managerial experience relevant to the project.

Name of Tenderer

Position [*#1*]: [*title of position from Form PER-1*]		
Personnel information	Name:	Date of birth:
	Address:	E-mail:
	Professional qualifications:	
	Academic qualifications:	
	Language proficiency: *[language and levels of speaking, reading and writing skills]*	
Details		
	Address of Procuring Entity:	
	Telephone:	Contact (manager / personnel officer):
	Fax:	
	Job title:	Years with present Procuring Entity:

Summarize professional experience in reverse chronological order. Indicate particular technical and managerial experience relevant to the project.

Project	**Role**	**Duration of involvement**	**Relevant experience**
[main project details]	*[role and responsibilities on the project]*	*[time in role]*	*[describe the experience relevant to this position]*

Declaration

I, the undersigned *[insert either "Contractor's Representative" or "Key Personnel" as applicable]*, certify that to the best of my knowledge and belief, the information contained in this Form PER-2 correctly describes myself, my qualifications and my experience.

I confirm that I am available as certified in the following table and throughout the expected time schedule for this position as provided in the Tender:

Commitment	**Details**
Commitment to duration of contract:	*[insert period (start and end dates) for which this Contractor's Representative or Key Personnel is available to work on this contract]*
Time commitment:	*[insert period (start and end dates) for which this Contractor's Representative or Key Personnel is available to work on this contract]*

I understand that any misrepresentation or omission in this Form may:

a) be taken into consideration during Tender evaluation;
b) result in my disqualification from participating in the Tender;
c) Result in my dismissal from the contract.

Name of Contractor's Representative or Key Personnel: [*insert name*]

Signature: _____

Date: (day month year): _____

Counter signature of authorized representative of the Tenderer:

Signature: _____

Date: (day month year): _____

5. TENDERER'S QUALIFICATIONWITHOUT PRE-QUALIFICATION

To establish its qualifications to perform the contract in accordance with Section III, Evaluation and Qualification Criteria the Tenderer shall provide the information requested in the corresponding Information Sheets included hereunder.

5.1 FORM ELI -1.1

Tenderer Information Form

Date: _____

ITT No. and title: _____

Tenderer's name
In case of Joint Venture (JV), name of each member:
Tenderer's actual or intended country of registration: *[indicate country of Constitution]*
Tenderer's actual or intended year of incorporation:
Tenderer's legal address [in country of registration]:
Tenderer's authorized representative information Name: _____ Address: _____ Telephone/Fax numbers: _____ E-mail address:
1. Attached are copies of original documents of ☐ Articles of Incorporation (or equivalent documents of constitution or association), and/or documents of registration of the legal entity named above, in accordance with ITT 3.6 ☐ In case of JV, letter of intent to form JV or JV agreement, in accordance with ITT 3.5 ☐ In case of state-owned enterprise or institution, in accordance with ITT 3.8, documents establishing: • Legal and financial autonomy • Operation under commercial law • Establishing that the Tenderer is not under the supervision of the Procuring Entity 2. Included are the organizational chart and a list of Board of Directors.

5.2 FORM ELI -1.2

Tenderer's JV Information Form
(to be completed for each member of Tenderer's JV)

Date: _____

ITT No. and title: _____

Tenderer's JV name:
JV member's name:
JV member's country of registration:
JV member's year of constitution:
JV member's legal address in country of constitution:
JV member's authorized representative information Name: _____ Address: _____ Telephone/Fax numbers: _____ E-mail address:
1. Attached are copies of original documents of ☐ Articles of Incorporation (or equivalent documents of constitution or association), and/or registration documents of the legal entity named above, in accordance with ITT 3.6. ☐ In case of a state-owned enterprise or institution, documents establishing legal and financial autonomy, operation in accordance with commercial law, and that they are not under the supervision of the Procuring Entity, in accordance with ITT 3.8. 2. Included are the organizational chart and a list of Board of Directors.

5.3 FORM CON – 2

Historical Contract Non-Performance, Pending Litigation and Litigation History

Tenderer's Name: _____
Date: _____
JV Member's Name_____
ITT No. and title: _____

Non-Performed Contracts in accordance with Section III, Evaluation and Qualification Criteria			
☐ Contract non-performance did not occur since 1st January *[insert year]* specified in Section III, Evaluation and Qualification Criteria, Sub-Factor 2.1. ☐ Contract(s) not performed since 1st January *[insert year]* specified in Section III, Evaluation and Qualification Criteria, requirement 2.1			
Year	**Non- performed portion of contract**	**Contract Identification**	**Total Contract Amount (current value, currency, exchange rate and Kenya Shilling equivalent)**
[insert year]	*[insert amount and percentage]*	Contract Identification: *[indicate complete contract name/ number, and any other identification]* Name of Procuring Entity: *[insert full name]* Address of Procuring Entity: *[insert street/city/country]* Reason(s) for non-performance: *[indicate main reason(s)]*	*[insert amount]*
Pending Litigation, in accordance with Section III, Evaluation and Qualification Criteria			
☐ No pending litigation in accordance with Section III, Evaluation and Qualification Criteria, Sub-Factor 2.3. ☐ Pending litigation in accordance with Section III, Evaluation and Qualification Criteria, Sub-Factor 2.3 as indicated below.			

Year of dispute	**Amount in dispute (currency)**	**Contract Identification**	**Total Contract Amount (currency), Kenya Shilling Equivalent (exchange rate)**
		Contract Identification: _____ Name of Procuring Entity: _____ Address of Procuring Entity: _____ Matter in dispute: _____ Party who initiated the dispute: Status of dispute:	
		Contract Identification: Name of Procuring Entity: Address of Procuring Entity: Matter in dispute: Party who initiated the dispute: Status of dispute:	
Litigation History in accordance with Section III, Evaluation and Qualification Criteria			
☐ No Litigation History in accordance with Section III, Evaluation and Qualification Criteria, Sub-Factor 2.4. ☐ Litigation History in accordance with Section III, Evaluation and Qualification Criteria, Sub-Factor 2.4 as indicated below.			
Year of award	**Outcome as percentage of Net Worth**	**Contract Identification**	**Total Contract Amount (currency), Kenya Shilling Equivalent (exchange rate)**

[insert year]	*[insert percentage]*	Contract Identification: [indicate complete contract name, number, and any other identification] Name of Procuring Entity: *[insert full name]* Address of Procuring Entity: *[insert street/city/country]* Matter in dispute: *[indicate main issues in dispute]* Party who initiated the dispute: *[indicate "Procuring Entity" or "Contractor"]* Reason(s) for Litigation and award decision *[indicate main reason(s)]*	*[insert amount]*

5.4 FORM FIN – 3.1:

Financial Situation and Performance

Tenderer's Name: _____
Date: _____
JV Member's Name_____
ITT No. and title: _____

5.4.1. Financial Data

Type of Financial information in_____ (currency)	**Historic information for previous _____ *years*, (amount in currency, currency, exchange rate*, USD equivalent)**				
	Year 1	**Year 2**	**Year 3**	**Year 4**	**Year 5**
Statement of Financial Position (Information from Balance Sheet)					
Total Assets (TA)					
Total Liabilities (TL)					
Total Equity/Net Worth (NW)					
Current Assets (CA)					
Current Liabilities (CL)					
Working Capital (WC)					
Information from Income Statement					
Total Revenue (TR)					
Profits Before Taxes (PBT)					
Cash Flow Information					

* Refer to ITT 15 for the exchange rate

Type of Financial information in_____ (currency)	**Historic information for previous _____ *years,* (amount in currency, currency, exchange rate*, USD equivalent)**				
	Year 1	**Year 2**	**Year 3**	**Year 4**	**Year 5**
Cash Flow from Operating Activities					

5.4.2 Sources of Finance

Specify sources of finance to meet the cash flow requirements on works currently in progress and for future contract commitments.

No.	**Source of finance**	**Amount (Kenya Shilling equivalent)**
1		
2		
3		

5.4.3 Financial documents

The Tenderer and its parties shall provide copies of financial statements for _____years pursuant Section III, Evaluation and Qualifications Criteria, Sub-factor 3.1. The financial statements shall:

(a) Reflect the financial situation of the Tenderer or in case of JV member, and not an affiliated entity (such as parent company or group member).

(b) Be independently audited or certified in accordance with local legislation.

(c) Be complete, including all notes to the financial statements.

(d) Correspond to accounting periods already completed and audited.

☐ Attached are copies of financial statements† for the _____years required above; and complying with the requirements

† If the most recent set of financial statements is for a period earlier than 12 months from the date of Tender, the reason for this should be justified.

5.5 FORM FIN – 3.2:

Average Annual Construction Turnover

Tenderer's Name: _____
Date: _____
JV Member's Name_____
ITT No. and title: _____

	Annual turnover data (construction only)		
Year	**Amount Currency**	**Exchange rate**	**Kenya Shilling equivalent**
[indicate year]	*[insert amount and indicate currency]*		
Average Annual Construction Turnover *			

* See Section III, Evaluation and Qualification Criteria, Sub-Factor 3.2.

5.6 FORM FIN – 3.3:

Financial Resources

Specify proposed sources of financing, such as liquid assets, unencumbered real assets, lines of credit, and other financial means, net of current commitments, available to meet the total construction cash flow demands of the subject contract or contracts as specified in Section III, Evaluation and Qualification Criteria

Financial Resources		
No.	**Source of financing**	**Amount (Kenya Shilling equivalent)**
1		
2		
3		

5.7 FORM FIN – 3.4:

Current Contract Commitments / Works in Progress

Tenderers and each member to a JV should provide information on their current commitments on all contracts that have been awarded, or for which a letter of intent or acceptance has been received, or for contracts approaching completion, but for which an unqualified, full completion certificate has yet to be issued.

Current Contract Commitments					
	Name of Contract	**Procuring Entity's Contact Address, Tel,**	**Value of Outstanding Work [Current Kenya Shilling /month Equivalent]**	**Estimated Completion Date**	**Average Monthly Invoicing Over Last Six Months [Kenya Shilling /month)]**
1					
2					
3					
4					
5					

5.8 FORM EXP - 4.1

General Construction Experience

Tenderer's Name: _____
Date: _____
JV Member's Name_____
ITT No. and title: _____

Page _____of _____pages

Starting Year	Ending Year	Contract Identification	Role of Tenderer
		Contract name: _____ Brief Description of the Works performed by the Tenderer: _____ Amount of contract: _____ Name of Procuring Entity: _____ Address:	
		Contract name: _____ Brief Description of the Works performed by the Tenderer: _____ Amount of contract: _____ Name of Procuring Entity: _____ Address:	
		Contract name: _____ Brief Description of the Works performed by the Tenderer: _____ Amount of contract: _____ Name of Procuring Entity: _____ Address:	

5.9 FORM EXP - 4.2(a)

Specific Construction and Contract Management Experience

Tenderer's Name: _____
Date: _____
JV Member's Name_____
ITT No. and title: _____

Similar Contract No.	**Information**			
Contract Identification				
Award date				
Completion date				
Role in Contract	Prime Contractor ☐	Member in JV ☐	Management Contractor ☐	Sub-contractor ☐
Total Contract Amount			**Kenya Shilling**	
If member in a JV or sub-contractor, specify participation in total Contract amount				
Procuring Entity's Name:				
Address: Telephone/fax number E-mail:				

FORM EXP - 4.2 (a) (cont.)

Specific Construction and Contract Management Experience (cont.)

Similar Contract No.	**Information**
Description of the similarity in accordance with Sub-Factor 4.2(a) of Section III:	
1. Amount	
2. Physical size of required works items	
3. Complexity	
4. Methods/Technology	
5. Construction rate for key activities	
6. Other Characteristics	

5.10 FORM EXP - 4.2(b)

Construction Experience in Key Activities

Tenderer's Name: _____
Date: _____
Tenderer's JV Member Name: _____
Sub-contractor's Name‡ (as per ITT 34): _____
ITT No. and title: _____

All Sub-contractors for key activities must complete the information in this form as per ITT 34 and Section III, Evaluation and Qualification Criteria, Sub-Factor 4.2.

1. Key Activity No One: _

	Information			
Contract Identification				
Award date				
Completion date				
Role in Contract	Prime Contractor ☐	Member in JV ☐	Management Contractor ☐	Sub-contractor ☐
Total Contract Amount			**Kenya Shilling**	
Quantity (Volume, number or rate of production, as applicable) performed under the contract per year or part of the year	Total quantity in the contract (i)	Percentage participation (ii)		Actual Quantity Performed (i) x (ii)
Year 1				
Year 2				
Year 3				
Year 4				
Procuring Entity's Name:				
Address: Telephone/fax number E-mail:				

‡ If applicable

	Information
Description of the key activities in accordance with Sub-Factor 4.2(b) of Section III:	

1.Activity No. Two

2. ……

OTHER FORMS

6. FORM OF TENDER
(Amended and issued pursuant to PPRA CIRCULAR No. 02/2022)

INSTRUCTIONS TO TENDERERS

i) All italicized text is to help the Tenderer in preparing this form.

ii) The Tenderer must prepare this Form of Tender on stationery with its letterhead clearly showing the Tenderer's complete name and business address. Tenderers are reminded that this is a mandatory requirement.

iii) Tenderer must complete and sign CERTIFICATE OF INDEPENDENT TENDER DETERMINATION and the SELF DECLARATION FORMS OF THE TENDERER as listed under (s) below.

Date of this Tender submission: .....*[insert date (as day, month and year) of Tender submission]* **Tender Name and Identification**: .....*[insert identification]* **Alternative No.**: .....*[insert identification No if this is a Tender for an alternative]*

To .....*[Insert complete name of Procuring Entity]*

Dear Sirs,

1. In accordance with the Conditions of Contract, Specifications, Drawings and Bills of Quantities for the execution of the above-namedWorks, we, the undersigned offer to construct and complete the Works and remedy any defects therein for the sum of Kenya Shillings [*[Amount in figures]*_____Kenya Shillings *[amount in words]*_____.

   The above amount includes foreign currency amount (s) of [*state figure or a percentage and currency*] [figures] _____[words]_____.

   The percentage or amount quoted above does not include provisional sums, and only allows not more than two foreign currencies.

2. Weundertake, if ourtender is accepted, tocommence the Worksas soon as is reasonablypossible after the receipt of the Project Manager's notice to commence, and to complete the whole of the Works comprised in the Contract within the time stated in the Special Conditions of Contract.

3. We agree to adhere by this tender until_____*[Insert date]*, and it shall remain binding upon us and may be accepted at any time before that date.

4. Unless and until a formal Agreement is prepared and executed this tender together with your written acceptance thereof, shall constitute a binding Contract between us. We further understand that you are not bound to accept the lowest or any tender you may receive.

5. We, the undersigned, further declare that:
   i) *No reservations:* We have examined and have no reservations to the tender document, including Addenda issued in accordance with ITT 28;
   ii) *Eligibility:* We meet the eligibility requirements and have no conflict of interest in accordance with ITT 3 and 4;
   iii) *Tender-Securing Declaration:* We have not been suspended nor declared ineligible by the Procuring Entity based on execution of a Tender-Securing or Proposal-Securing Declaration in the Procuring Entity's Country in accordance with ITT 19.8;
   iv) Conformity: We offer to execute in conformity with the tendering documents and in accordance with the implementation and completion specified in the construction schedule, the following Works: *[insert a brief description of the Works];*

v) *Tender Price:* The total price of our Tender, excluding any discounts offered in item 1 above is: *[Insert one of the options below as appropriate]*

vi Option 1, in case of one lot: Total price is: [*insert the total price of the Tender in words and figures, indicating the various amounts and the respective currencies*]; Or

Option 2, in case of multiple lots:

a) Total price of each lot [*insert the total price of each lot in words and figures, indicating the various amounts and there spective currencies*]; and

b) Total price of all lots (sum of all lots) [*insert the total price of all lots in words and figures, indicating the various amounts and the respective currencies*];

vii) *Discounts:* The discounts offered and the methodology for their application are:

viii) The discounts offered are: [*Specify in detail each discount offered.*]

ix) The exact method of calculations to determine the net price after application of discounts is shown below: [*Specify in detail the method that shall be used to apply the discounts*];

x) *Tender Validity Period:* Our Tender shall be valid for the period specified in TDS 18.1 (as amended, if applicable) from the date fixed for the Tender submission deadline specified in TDS 22.1 (as amended, if applicable), and it shall remain binding upon us and may be accepted at any time before the expiration of that period;

xi) *Performance Security:* If our Tender is accepted, we commit to obtain a Performance Security in accordance with the Tendering document;

xii) *One Tender Per Tender:* We are not submitting any other Tender(s) as an individual Tender, and we are not participating in any other Tender(s) as a Joint Venture member or as a subcontractor, and meet the requirements of ITT 3.4, other than alternative Tenders submitted in accordance with ITT 13.3;

xiii) *Suspension and Debarment:* We, along with any of our subcontractors, suppliers, Project Manager, manufacturers, or service providers for any part of the contract, are not subject to, and not controlled by any entity or individual that is subject to, a temporary suspension or a debarment imposed by the Public Procurement Regulatory Authority or any other entity of the Government of Kenya, or any international organization.

xiv) *State-owned enterprise or institution:* [*select the appropriate option and delete the other*] [*We are not a state-owned enterprise or institution*] / [*We are a state-owned enterprise or institution but meet the requirements of ITT 3.8*];

xv) *Commissions, gratuities, fees:* We have paid, or will pay the following commissions, gratuities, or fees with respect to the tender process or execution of the Contract: *[insert complete name of each Recipient, its full address, the reason for which each commission or gratuity was paid and the amount and currency of eachsuchcommission or gratuity]*.

Name of Recipient	Address	Reason	Amount

(If none has been paid or is to be paid, indicate "none.")

xvi) Binding Contract: We understand that this Tender, together with your written acceptance thereof included in your Letter of Acceptance, shall constitute a binding contract between us, until a formal contract is prepared and executed;

xvii) Not Bound to Accept: We understand that you are not bound to accept the lowest evaluated cost Tender, the Most Advantageous Tenderer any other Tender that you may receive;

xviii) Fraud and Corruption: We hereby certify that we have taken steps to ensure that no person acting for us or on our behalf engages in any type of Fraud and Corruption;

xix) Collusive practices: We hereby certify and confirm that the tender is genuine, non-collusive and made with the intention of accepting the contract if awarded. To this effect we have signed the "Certificate of Independent Tender Determination" attached below.

xx) We undertake to adhere by the Code of Ethics for Persons Participating in Public Procurement and Asset Disposal, copy available from_____(*specify website*) during the procurement process and the execution of any resulting contract.

xxi) **Beneficial Ownership Information:** We commit to provide to the procuring entity the Beneficial Ownership Information in conformity with the Beneficial Ownership Disclosure Form upon receipt of notification of intention to enter into a contract in the event we are the successful tenderer in this subject procurement proceeding.

xxii) We, the Tenderer, have duly completed, signed and stamped the following Forms as part of our Tender:
- a) Tenderer's Eligibility; Confidential Business Questionnaire – to establish we are not in any conflict to interest.
- b) Certificate of Independent Tender Determination – to declare that we completed the tender without colluding with other tenderers.
- c) Self-Declaration of the Tenderer – to declare that we will, if awarded a contract, not engage in any form of fraud and corruption.
- d) Declaration and commitment to the Code of Ethics for Persons Participating in Public Procurement and Asset Disposal

Further, we confirm that we have read and understood the full content and scope of fraud and corruption as informed in **"Appendix 1- Fraud and Corruption**" attached to the Form of Tender.

Name of the Tenderer: *[*insert complete name of person signing the Tender*]

Name of the person duly authorized to sign the Tender on behalf of the Tenderer: **[*insert complete name of person dulyauthorized to sign the Tender*]

Title of the person signing the Tender:[*insertcomplete title of the person signing the Tender*]

Signature of the person named above: [*insert signature of person whose name and capacity are shown above*] **Date signed** [*insert date of signing*] dayof[*insertmonth*], [*insert year*]

Date signed_____day of_____, _____

Notes

** In the case of the Tender submitted by joint venture specify the name of the Joint Venture as Tenderer*

*** Person signing the Tender shall have the power of attorney given by the Tenderer to be attached with the Tender.*

A. TENDERER'S ELIGIBILITY- CONFIDENTIALBUSINESS QUESTIONNAIRE

Instruction to Tenderer

Tender is instructed to complete the particulars required in this Form, *one form for each entity if Tender is a JV.*Tenderer is further reminded that it is an offence to give false information on this Form.

(a) Tenderer's details

	ITEM	DESCRIPTION
1	Name of the Procuring Entity	
2	Reference Number of the Tender	
3	Date and Time of Tender Opening	
4	Name of the Tenderer	
5	Full Address and Contact Details of the Tenderer.	1. Country 2. City 3. Location 4. Building 5. Floor 6. Postal Address 7. Name and email of contact person.
6	Current Trade License Registration Number and Expiring date	
7	Name, country and full address (*postal and physical addresses, email, and telephone number*) of Registering Body/Agency	
8	Description of Nature of Business	
9	Maximum value of business which the Tenderer handles.	
10	State if Tenders Company is listed in stock exchange, give name and full address (*postal and physical addresses, email, and telephone number*) of state which stock exchange	

General and Specific Details

b) Sole Proprietor, provide the following details.

Name in full_____Age_____Nationality _____Country of Origin_____Citizenship _____

c) Partnership, provide the following details.

	Names of Partners	Nationality	Citizenship	% Shares owned
1				
2				
3				

d) Registered Company, provide the following details.

i) Private or public Company

ii) State the nominal and issued capital of the Company _____ Nominal Kenya Shillings (Equivalent)..... Issued Kenya Shillings (Equivalent).....

iii) Give details of Directors as follows.

	Names of Director	Nationality	Citizenship	% Shares owned
1				
2				
3				

(e) DISCLOSURE OFINTEREST- Interest of the Firm in the Procuring Entity.

i) Are there any person/persons in ..... (*Name of Procuring Entity)* who has/have an interest or relationship in this firm? Yes/No……

If yes, provide details as follows.

	Names of Person	Designation in the Procuring Entity	Interest or Relationship with Tenderer
1			
2			
3			

ii) Conflict of interest disclosure

	Type of Conflict	Disclosure YES OR NO	If YES provide details of the relationship with Tenderer
1	Tenderer is directly or indirectly controls, is controlled by or is under common control with another tenderer.		
2	Tenderer receives or has received any direct or indirect subsidy from another tenderer.		
3	Tenderer has the same legal representative as another tenderer		
4	Tender has a relationship with another tenderer, directly or through common third parties, that puts it in a position to influence the tender of another tenderer or influence the decisions of the Procuring Entity Regarding this tendering process.		
5	Any of the Tenderer's affiliates participated as a consultant in the preparation of the design or technical specifications of the works that are the subject of the tender.		

	Type of Conflict	Disclosure YES OR NO	If YES provide details of the relationship with Tenderer
6	Tenderer would be providing goods, works, non-consulting services or consulting services during implementation of the contract specified in this Tender Document.		
7	Tenderer has a close business or family relationship with a professional staff of the Procuring Entity who are directly or indirectly involved in the preparation of the Tender document or specifications of the Contract, and/or the Tender evaluation process of such contract.		
8	Tenderer has a close business or family relationship with a professional staff of the Procuring Entity who would be involved in the implementation or supervision of such Contract.		
9	Has the conflict stemming from such relationship stated in item 7 and 8 above been resolved in a manner acceptable to the Procuring Entity throughout the tendering process and execution of the Contract.		

f) Certification

On behalf of the Tenderer, I certify that the information given above is complete, current and accurate as at the date of submission.

Full Name _____

Title or Designation _____

_____ *(Signature)* _____ _____ *(Date)* _____

B. CERTIFICATE OF INDEPENDENT TENDER DETERMINATION

I, the undersigned, in submitting the accompanying Letter of Tender to the_____[Name of Procuring Entity] for:_____[Name and number of tenders] in response to the request for tenders made by:_____[Name of Tenderer] do hereby make the following statements that I certify to be true and complete in every respect:

I certify, on behalf of_____[Name of Tenderer] that:

1. I have read and I understand the contents of this Certificate;

2. I understand that the Tender will be disqualified if this Certificate is found not to be true and complete in every respect;

3. I am the authorized representative of the Tenderer with authority to sign this Certificate, and to submit the Tender on behalf of the Tenderer;

4. For the purposes of this Certificate and the Tender, I understand that the word "competitor" shall include any individual or organization, other than the Tenderer, whether or not affiliated with the Tenderer, who:
   a) has been requested to submit a Tender in response to this request for tenders;
   b) could potentially submit a tender in response to this request for tenders, based on their qualifications, abilities or experience;

5. The Tenderer discloses that [check one of the following, as applicable:
   a) The Tenderer has arrived at the Tender independently from, and without consultation, communication, agreement or arrangement with, any competitor;
   b) the Tenderer has entered into consultations, communications, agreements or arrangements with one or more competitors regarding this request for tenders, and the Tenderer discloses, in the attached document(s), complete details thereof, including the names of the competitors and the nature of, and reasons for, such consultations, communications, agreements or arrangements;

6. In particular, without limiting the generality of paragraphs (5)(a) or (5)(b) above, there has been no consultation, communication, agreement or arrangement with any competitor regarding:
   a) prices;
   b) methods, factors or formulas used to calculate prices;
   c) the intention or decision to submit, or not to submit, a tender; or
   d) the submission of a tender which does not meet the specifications of the request for Tenders; except as specifically disclosed pursuant to paragraph (5)(b) above;

7. In addition, there has been no consultation, communication, agreement or arrangement with any competitor regarding the quality, quantity, specifications or delivery particulars of the works or services to which this request for tenders relates, except as specifically authorized by the procuring authority or as specifically disclosed pursuant to paragraph (5)(b) above;

8. the terms of the Tender have not been, and will not be, knowingly disclosed by the Tenderer, directly or indirectly, to any competitor, prior to the date and time of the official tender opening, or of the awarding of the Contract, whichever comes first, unless otherwise required by law or as specifically disclosed pursuant to paragraph (5)(b) above.

Name_____Title_____Date _____

[Name, title and signature of authorized agent of Tenderer and Date].

C. SELF - DECLARATION FORMS

FORM SD1

SELF DECLARATION THAT THE PERSON/TENDERER IS NOT DEBARRED IN THE MATTER OF THE PUBLIC PROCUREMENTAND ASSET DISPOSALACT 2015.

I, ……., of Post Office Box.....being a resident of …….. in the Republic of ..... do hereby make a statement as follows: -

1. THAT I am the Company Secretary/ Chief Executive/Managing Director/Principal Officer/Director of … ..... *(insert name of the Company)* who is a Bidder in respect of Tender No. …….. for ……. *(insert tender title/description)* for..... *(insert name of the Procuring entity)* and duly authorized and competent to make this statement.

2. THAT the aforesaid Bidder, its directors and subcontractors have not been debarred from participating in procurement proceeding under Part IV of the Act.

3. THATwhat is deponed to herein above is true to the best of my knowledge, information and belief.

…… ……. … ..... (Title)
(Signature) (Date)

Bidder Official Stamp

FORM SD2

SELF DECLARATION THAT THE PERSON/TENDERER WILL NOT ENGAGE IN ANY CORRUPT OR FRAUDULENT PRACTICE

I, ……. of P. O. Box .....being a resident of …….. In the Republic of..... do hereby make a statement as follows: -

1. THAT I am the Chief Executive/Managing Director/Principal Officer/Director of.....*(insert Name of the Company)* who is a Bidder in respect of Tender No.....for …….. *(Insert tender title/description)* for..... *(insert name of the Procuring entity)* and duly Authorized and competent to make this statement.

2. THAT the aforesaid Bidder, its servants and/or agents /subcontractors will not engage in any corrupt or fraudulent practice and has not been requested to pay any inducement to any member of the Board, Management, Staff and/or employees and/or agents of.....*(insert name of the Procuring entity)* which is the procuring Entity.

3. THAT the aforesaid Bidder, its servants and/or agents /subcontractors have not offered any inducement to any member of the Board, Management, Staff and/or employees and/or agents of..... (name of the Procuring entity)

4. THAT the aforesaid Bidder will not engage /has not engaged in any corrosive practice with other bidders participating in the subject tender

5. THAT what is deponed to herein above is true to the best of my knowledge information and belief.

……	……..……	.....……
(Title)	(Signature)	(Date)

Bidder's Official Stamp

FORM SD3

DECLARATION AND COMMITMENT TO THE CODE OF ETHICS

I ……..……. (Person) on behalf of *(Name of the Business/ Company/Firm*).....declare that I have read and fully understood the Contents of the Public Procurement & Asset Disposal Act, 2015, Regulations and the Code of Ethics for persons participating in Public Procurement and Asset Disposal and my responsibilities under the Code.

I do hereby commit to abide by the provisions of the Code of Ethics for persons participating in Public Procurement and Asset Disposal.

Name of Authorized signatory……..... Sign…….....

Position…….....…….....

Office address……. Telephone…….....…….

E-mail…….....….....…

Name of the Firm/Company…….....……

Date….....(Company Seal/ Rubber

Stamp where applicable)

Witness

Name ……..... Sign.....

Date……

D. APPENDIX 1- FRAUD AND CORRUPTION

(Appendix 1 shall not be modified)

4. Purpose

1.1 The Government of Kenya's Anti-Corruption and Economic Crime laws and their sanction's policies and procedures, Public Procurement and Asset Disposal Act *(no. 33 of 2015)* and its Regulation, and any other Kenya's Acts or Regulations related to Fraud and Corruption, and similar offences, shall apply with respect to Public Procurement Processes and Contracts that are governed by the laws of Kenya.

5. Requirements

2.1 The Government of Kenya requires that all parties including Procuring Entities, Tenderers, (applicants/proposers), Consultants, Contractors and Suppliers; any Sub-contractors, Sub-consultants, Service providers or Suppliers; any Agents (whether declared or not); and any of their Personnel, involved and engaged in procurement under Kenya's Laws and Regulation, observe the highest standard of ethics during the procurement process, selection and contract execution of all contracts, and refrain from Fraud and Corruption and fully comply with Kenya's laws and Regulations as per paragraphs 1.1 above.

2.2 Kenya's public procurement and asset disposal act *(no. 33 of 2015)* under Section 66 describes rules to be followed and actions to be taken in dealing with Corrupt, Coercive, Obstructive, Collusive or Fraudulent practices, and Conflicts of Interest in procurement including consequences for offences committed. A few of the provisions noted below highlight Kenya's policyof no tolerance for such practices and behaviour: -

1) a person to whom this Act applies shall not be involved in any corrupt, coercive, obstructive, collusive or fraudulent practice; or conflicts of interest in any procurement or asset disposal proceeding;

2) A person referred to under subsection (1) who contravenes the provisions of that sub-section commits an offence;

3) Without limiting the generality of the subsection (1) and (2), the person shall be: -

   a) disqualified from entering into a contract for a procurement or asset disposal proceeding; or

   b) if a contract has already been entered into with the person, the contract shall be voidable;

4) The voiding of a contract by the procuring entity under subsection (7) does not limit any legal remedy the procuring entity may have;

5) An employee or agent of the procuring entity or a member of the Board or committee of the procuring entity who has a conflict of interest with respect to a procurement: -

   a) shall not take part in the procurement proceedings;

   b) shall not, after a procurement contract has been entered into, take part in any decision relating to the procurement or contract; and

c) shall not be a subcontractor for the bidder to whom was awarded contract, or a member of the group of biddersto whomthe contract was awarded, but the subcontractor appointed shall meet all the requirements of this Act.

6) An employee, agent or member described in subsection (1) who refrains from doing anything prohibited under that subsection, but for that subsection, would have been within his or her duties shall disclose the conflict of interest to the procuring entity;

7) If a person contravenes subsection (1) with respect to a conflict of interest described in subsection (5)(a) and the contract is awarded to the person or his relative or to another person in whom one of them had a direct or indirect pecuniary interest, the contract shall be terminated, and all costs incurred by the public entity shall be made good by the awarding officer. Etc.

6. In compliance with Kenya's laws, regulations and policies mentioned above, the Procuring Entity:

a) Defines broadly, for the purposes of the above provisions, the terms set forth below as follows:

   i) "corrupt practice" is the offering, giving, receiving, or soliciting, directly or indirectly, of anything of value to influence improperly the actions of another party;

   ii) "fraudulent practice" is any act or omission, including misrepresentation, that knowingly or recklessly misleads, or attempts to mislead, a party to obtain financial or other benefit or to avoid an obligation;

iii) "collusive practice" is an arrangement between two or more parties designed to achieve an improper purpose, including to influence improperly the actions of another party;

iv) "coercive practice" is impairing or harming, or threatening to impair or harm, directly or indirectly, any party or the property of the party to influence improperly the actions of a party;

v) "obstructive practice" is:

- deliberately destroying, falsifying, altering, or concealing of evidence material to the investigation or making false statements to investigators in order to materially impede investigation by Public Procurement Regulatory Authority (PPRA) or any other appropriate authority appointed by Government of Kenya into allegations of a corrupt, fraudulent, coercive, or collusive practice; and/or threatening, harassing, or intimidating any party to prevent it from disclosing its knowledge of matters relevant to the investigation or from pursuing the investigation; or
- acts intended to materially impede the exercise of the PPRA's or the appointed authority's inspection and audit rights provided for under paragraph 2.3 e. below.

b) Defines more specifically, in accordance with the above procurement Act provisions set forth for fraudulent and collusive practices as follows:

"fraudulent practice" includes a misrepresentation of fact in order to influence a procurement or disposal process or the exercise of a contract to the detriment of the procuring entity or the tenderer or the contractor, and includes collusive practices amongst tenderers prior to or after tender submission designed to establish tender prices at artificial non-competitive levels and to deprive the procuring entity of the benefits of free and open competition.

c) Rejects a proposal for award[1] of a contract if PPRA determines that the firm or individual recommended for award, any of its personnel, or its agents, or its sub-consultants, sub-contractors, service providers, suppliers and/ or their employees, has, directly or indirectly, engaged in corrupt, fraudulent, collusive, coercive, or obstructive practices in competing for the contract in question;

d) Pursuant to the Kenya's above stated Acts and Regulations, may sanction or recommend to appropriate authority (ies) for sanctioning and debarment of a firm or individual, as applicable under the Acts and Regulations;

e) Requires that a clause be included in Tender documents and Request for Proposal documents requiring (i) Tenderers (applicants/proposers), Consultants, Contractors, and Suppliers, and their Sub-contractors, Sub-consultants, Service providers, Suppliers, Agents personnel, permit the PPRA or any other appropriate authority appointed by Government of Kenya to inspect[2] all accounts, records and other documents relating to the procurement process, selection and/or contract execution, and to have them audited by auditors appointed by the PPRA or any other appropriate authority appointed by Government of Kenya; and

f) Pursuant to Section 62 of the above Act, requires Applicants/Tenderers to submit along with their Applications/Tenders/Proposals a "Self-Declaration Form" as included in the procurement document declaring that they and all parties involved in the procurement process and contract execution have not engaged/will not engage in any corrupt or fraudulent practices.

---

[1] *For the avoidance of doubt, a party's ineligibility to be awarded a contract shall include, without limitation, (i) applying for pre-qualification, expressing interest in a consultancy, and tendering, either directly or as a nominated sub-contractor, nominated consultant, nominated manufacturer or supplier, or nominated service provider, in respect of such contract, and (ii) entering into an addendum or amendment introducing a material modification to any existing contract.*

[2] *Inspections in this context usually are investigative (i.e., forensic) in nature. They involve fact-finding activities undertaken by the Investigating Authority or persons appointed by the Procuring Entity to address specific matters related to investigations/audits, such as evaluating the veracity of an allegation of possible Fraud and Corruption, through the appropriate mechanisms. Such activity includes but is not limited to: accessing and examining a firm's or individual's financial records and information, and making copies thereof as relevant; accessing and examining any other documents, data and information (whether in hard copy or electronic format) deemed relevant for the investigation/audit, and making copies thereof as relevant; interviewing staff and other relevant individuals; performing physical inspections and site visits; and obtaining third party verification of information.*

7. FORM OF TENDER SECURITY-[Option 1–Demand Bank Guarantee]

Beneficiary:____

Request for Tenders No:

_____

Date:_____

TENDER GUARANTEE No.:_____

Guarantor: _____

1. We have been informed that_____(here in after called "the Applicant") has submitted or will submit to the Beneficiary its Tender (here in after called" the Tender") for the execution of_____ under Request for Tenders No._____("The ITT").

2. Furthermore, we understand that, according to the Beneficiary's conditions, Tenders must be supported by a Tender guarantee.

3. At the request of the Applicant, we, as Guarantor, hereby irrevocably undertake to pay the Beneficiary any sum or sums not exceeding in total an amount of_____(_____) upon receipt by us of the Beneficiary's complying demand, supported by the Beneficiary's statement, whether in the demand itself or a separate signed document accompanying or identifying the demand, stating that either the Applicant:

(a) has withdrawn its Tender during the period of Tender validity set forth in the Applicant's Letter of Tender ("the Tender Validity Period"), or any extension thereto provided by the Applicant; or

b) having been notified of the acceptance of its Tender by the Beneficiary during the Tender Validity Period or any extension there to provide by the Applicant, (i) has failed to execute the contract agreement, or (ii) has failed to furnish the Performance.

4. This guarantee will expire: (a) if the Applicant is the successful Tenderer, upon our receipt of copies of the contract agreement signed by the Applicant and the Performance Security and, or (b) if the Applicant is not the successful Tenderer, upon the earlier of (i) our receipt of a copy of the Beneficiary's notification to the Applicant of the results of the Tendering process; or (ii) thirty days after the end of the Tender Validity Period.

5. Consequently, any demand for payment under this guarantee must be received by us at the office indicated above onor before that date.

_____

[Signature]

Note: All italicized text is for use in preparing this form and shall be deleted from the final product.

8. FORMAT OF TENDER SECURITY [Option 2–Insurance Guarantee]

TENDER GUARANTEE No.: _____

1. Whereas …… [*Name of the tenderer]* (Hereinafter called "the tenderer") has submitted its tender dated …… [*Date of submission of tender]* for the ..... *[Name and/or description of the tender]* (Hereinafter called "the Tender") for the execution of_____under Request for Tenders No._____("the ITT").

2. KNOW ALL PEOPLE by these presents that WE …… of ..... [**Name of Insurance Company**] having our registered office at …… (Hereinafter called "the Guarantor"), are bound unto …….. [*Name of Procuring Entity*] (Hereinafter called "the Procuring Entity") in the sum of …… (Currency and guarantee amount) for which payment well and truly to be made to the said Procuring Entity, the Guarantor binds itself, its successors and assigns, jointly and severally, firmly by these presents.

Sealed with the Common Seal of the said Guarantor this ___day of _____20 __.

3. NOW, THEREFORE, THE CONDITION OF THIS OBLIGATION is such that if the Applicant:

   a) has withdrawn its Tender during the period of Tender validity set forth in the Principal's Letter of Tender ("the Tender Validity Period"), or any extension thereto provided by the Principal; or

   b) having been notified of the acceptance of its Tender by the Procuring Entity during the Tender Validity Period or any extension thereto provided by the Principal; (i) failed to execute the Contract agreement; or (ii) has failed to furnish the Performance Security, in accordance with the Instructions to tenderers ("ITT") of the Procuring Entity's Tendering document.

   then the guarantee undertakes to immediately pay to the Procuring Entity up to the above amount upon receipt of the Procuring Entity's first written demand, without the Procuring Entity having to substantiate its demand, provided that in its demand the Procuring Entity shall state that the demand arises from the occurrence of any of the above events, specifying which event(s) has occurred.

4. This guarantee will expire: (a) if the Applicant is the successful Tenderer, upon our receipt of copies of the contract agreement signed by the Applicant and the Performance Security and, or (b) if the Applicant is not the successful Tenderer, upon the earlier of (i) our receipt of a copy of the Beneficiary's notification to the Applicant of the results of the Tendering process; or (ii)twenty-eight days after the end of the Tender Validity Period.

5. Consequently, any demand for payment under this guarantee must be received by us at the office indicated above on or before that date.

_____	_____
[Date]	*[Signature of the Guarantor]*
_____	_____
[Witness]	*[Seal]*

Note: All italicized text is for use in preparing this form and shall be deleted from the final product.

9. TENDER-SECURING DECLARATION FORM

[The Bidder shall complete this Form in accordance with the instructions indicated]

Date.....*[insert date (as day, month and year) of Tender Submission]*
Tender No..... *[Insert number of tendering process]*
To:..... *[insertcompletenameofPurchaser]* I/We, the undersigned, declare that:

1. I/Weunderstand that, according to your conditions, bids must be supported by a Tender-Securing Declaration.

2. I/We accept that I/we will automatically be suspended from being eligible for tendering in any contract with the Purchaser for the period of time of [insert number of months or years] starting on [insert date], if we are in breach of our obligation(s) under the bid conditions, because we – (a) have withdrawn our tender during the period of tender validity specified by us in the Tendering Data Sheet; or (b) having been notified of the acceptance of our Bid by the Purchaser during the period of bid validity, (i) fail or refuse to execute the Contract, if required, or (ii) fail or refuse to furnish the Performance Security, in accordance with the instructions to tenders.

3. I/We understand that this Tender Securing Declaration shall expire if we are not the successful Tenderer(s), upon the earlier of:
   a) our receipt of a copy of your notification of the name of the successful Tenderer; or
   b) thirty days after the expiration of our Tender.

4. I/We understand that if I am/we are/in a Joint Venture, the Tender Securing Declaration must be in the name of the Joint Venture that submits the bid, and the Joint Venture has not been legally constituted at the time of bidding, the Tender Securing Declaration shall be in the names of all future partners as named in the letter of intent.

Signed:……..……....…..

Capacity / title (director or partner or sole proprietor, etc.) …….…….....…….

Name: ……..

Duly authorized to sign the bid for and on behalf of: *[insert complete name of Tenderer]*

Dated on ……. day of..... *[Insert date of signing]* Seal or stamp

10. APPENDIX TO TENDER

Schedule of Currency requirements

Summary of currencies of the Tender for_____*[insert name of Section of the Works]*

Name of currency	***Amounts payable***
Local currency: _____	
Foreign currency #1: _____	
Foreign currency #2: _____	
Foreign currency #3: _____	
Provisional sums expressed in local currency	[To be entered by the Procuring Entity]

PART II - WORK REQUIREMENTS

SECTION V – DRAWINGS

Book of drawings Vol 1

SECTION VI - SPECIFICATIONS

Notes for preparing Specifications

1. Specifications must be drafted to present a clear and precise statement of the required standards of materials, and workmanship for tenderers to respond realistically and competitively to the requirements of the Procuring Entity and ensure responsiveness of tenders. The Specifications should require that all materials, plant, and other supplies to be permanently incorporated in the Works be new, unused, of the most recent or current models, and incorporating all recent improvements in design and materials unless provided otherwise in the Contract. Where the Contractor is responsible for the design of any part of the permanent Works, the extent of his obligations must be stated.

2. Specifications from previous similar projects are useful and may not be necessary to re-write specifications for every Works Contract.

3. There are considerable advantages in standardizing **General Specifications** for repetitive Works in recognized public sectors, such as highways, urban housing, irrigation and water supply. The General Specifications should cover all classes of workmanship, materials and equipment commonly involved in constructions, although not necessarily to be used in a particular works contract. Deletions or addenda should then adapt the General Specifications to the particular Works.

4. Care must be taken in drafting Specifications to ensure they are not restrictive. In the Specifications of standards for materials, plant and workmanship, existing Kenya Standards should be used as much as possible, otherwise recognized international standards may also be used.

5. The Procuring Entity should decide whether technical solutions to specified parts of the Works are to be permitted. Alternatives are appropriate in cases where obvious (and potentially less costly) alternatives are possible to the technical solutions indicated in tender documents for certain elements of the Works, taking into consideration the comparative specialized advantage of potential tenderers.

6. The Procuring Entity should provide a description of the selected parts of the Works with appropriate reference to Drawings, Specifications, Bills of Quantities, and Design or Performance criteria, stating that the alternative solutions shall be at least structurally and functionally equivalent to the basic design parameters and Specifications.

7. Such alternative solutions shall be accompanied by all information necessary for a complete evaluation by the Procuring Entity, including drawings, design calculations, technical specifications, breakdown of prices, proposed construction methodology, and other relevant details. Technical alternatives permitted in this manner shall be considered by the Procuring Entity each on its own merits and independently of whether the tenderer has priced the item as described in the Procuring Entity's design included with the tender documents.

SECTION VII- BILLS OF QUANTITIES

1. Objectives

The objectives of the Bill of Quantities are:

a) to provide sufficient information on the quantities of Works to be performed to enable tenders to be prepared efficiently and accurately; and

b) When a Contract has been entered into, to provide a priced Bill of Quantities for use in the periodic valuation of Works executed.

In order to attain these objectives, Works should be itemized in the Bill of Quantities in sufficient detail to distinguish between the different classes of Works, or between Works of the same nature carried out in different locations or in other circumstances which may give rise to different considerations of cost. Consistent with these requirements, the layout and contents of the Bill of Quantities should be as simple and brief as possible.

2. Day work Schedule

A Day work Schedule should be included only if the probability of unforeseen work, outside the items included in the Bill of Quantities, is high. To facilitate checking by the Procuring Entity of the realism of rates quoted by the Tenderers, the Day work Schedule should normally comprise the following:

a) A list of the various classes of labor, materials, and Constructional Plant for which basic day work rates or prices are to be inserted by the Tenderer, together with a statement of the conditions under which the Contractor shall be paid for work executed on a day work basis.

b) Nominal quantities for each item of day work, to be priced by each Tenderer at day work rates as Tender. The rate to be entered by the Tenderer against each basic day work item should include the Contractor's profit, overheads, supervision, and other charges.

3. Provisional Sums

A general provision for physical contingencies (quantity overruns) may be made by including a provisional sum in the Summary Bill of Quantities. Similarly, a contingency allowance for possible price increases should be provided as a provisional sum in the Summary priced Bill of Quantities. The inclusion of such provisional sums often facilitates budgetary approval by avoiding the need to request periodic supplementary approvals as the future need arises. Where such provisional sums or contingency allowances are used, the Special Conditions of Contract should state the manner in which they shall be used, and under whose authority (usually the Project Manager's).

The estimated cost of specialized work to be carried out, or of special goods to be supplied, by other contractors should be indicated in the relevant part of the Bill of Quantities as a particular provisional sum with an appropriate brief description. A separate procurement procedure is normally carried out by the Procuring Entity to select such specialized contractors. To provide an element of competition among the Tenderers in respect of any facilities, amenities, attendance, etc., to be provided by the successful Tenderer as prime Contractor for the use and convenience of the specialist contractors, each related provisional sum should be followed by an item in the Bill of Quantities inviting the Tenderer to quote a sum for such amenities, facilities, attendance, etc.

These Notes for Preparing a Bill of Quantities are intended only as information for the Procuring Entity or the person drafting the tendering document. They should not be included in the final tendering document.

4. The Bills of Quantities

The Bills of Quantities should be divided generally into the following sections:

a) Preambles
b) Preliminary items
c) Work Items
c) Daywork Schedule; and
d) Provisional items
e) Summary.

BILLS OF QUANTITIES

PREAMBLE AND NOTES TO BILLS OF QUANTITIES

1. These Bills of Quantities form part of the Contract Documents and are to be read in conjunction with the Conditions of Contract, Standard and Special Specifications and Drawings. Whenever reference is made to "The Engineer (or "The Resident Engineer")" or "The Engineer's Representative" in the Bills of Quantities, it shall be construed to mean "The Project Manager" or "The Project Manager's Representative" respectively.

2. The quantities set forth in the Bills of Quantities represent the character of the work to be carried out. There is no guarantee to the Contractor that he will be required to carry out the quantities of work indicated under any one particular item or group of items in the Bills of Quantities, though on the Contract as a whole the quantities are intended to represent the overall value of the work to be carried out.

3. The prices and rates inserted in the Bills of Quantities will be used for valuing the work executed and the Project Manager will measure the whole of the works executed in accordance with the Contract.

4. The prices and rates inserted in the Bills of Quantities are to be the full inclusive costs of the works described under the items, complete in place and in accordance with the Specifications and Drawings, including setting out of the works, including costs and expenses which may be required in and for the construction of the works described, together with any temporary works and installations which may be necessary and all general risks, liabilities and obligations set forth or implied in the Documents on which the Contract is based.

5. The brief description of the items given in the Bills of Quantities are purely for the purpose of identification and in no way modify or supersede the detailed descriptions given in the Conditions of Contract, Specifications or Drawings. When pricing items, reference is to be made to the Conditions of Contract, Standard Specifications, Drawings and Special Specification for the full directions and description of work and materials.

6. A price or rate is to be inserted, in ink, against each item in the Bills of Quantities, whether quantities are stated or not, and if the Bidder includes the cost of a particular item elsewhere in his rates or prices, he shall insert the word "nil" against both the rate and extension of that particular item. Should the Bidder omit to price an item, then it will be assumed that he has included the cost of the item elsewhere in his rates or prices.

7. No alteration shall be made to the Bills of Quantities and no extra item shall be inserted. The Bidder shall satisfy himself that the Contract Sum arrived at by pricing the quantities and items given is sufficient compensation for constructing and maintaining the whole of the works in accordance with the Contract Documents.

8. For the purpose of payment by Interim Certificate of "Lump Sum" items the Project Manager may assess the portion of the work completed on the "Lump Sum" item and allow for payment of the portion of the "Lump Sum" he deems fair and reasonable. The total of all portions allowed shall not exceed the "Lump Sum". All interim payments shall be subject to the retention stipulated in the Contract Documents.

9. During construction the unit rate established for an item in one Bill of Quantities may be used

as a basis for establishing a unit rate for similar work in another Bill of Quantities which contains no such item. No additional cost will be considered for such an eventuality.

10. The Contractor will be provided by the Employer with all that land occupied by the Permanent Works including the specified working width for pipe laying and other permanent construction works. The costs of compensation and entry upon land (if any) for the specified working width will be paid by the Employer. All other costs for temporary access to the works or additional working space shall be paid by the Contractor.

11. It shall be the responsibility of the Contractor to arrange for the removal of, or alteration to existing services were necessitated by the Works. Costs incurred will be paid under relevant items in the Bills of Quantities.

12. Quantities for site clearance, stripping and spreading shall be based on plain area cleared or stripped.

13. The rates for excavation items shall be deemed to include inter alia for setting aside spoil for reuse in the Works or disposing to approved tips identified by the Contractor in liaison with the Local Authority, except where otherwise provided for in the Bills of Quantities.

14. Generally, excavation items are based on volumes for structures and on linear measurements for certain pipelines. The work may be covered by one or more items. The rates shall include as appropriate for:

    a) Breaking through surfaces, handling different classes of material separately; excavation beyond the net plan area of the foundations, for working space and for battering or timbering etc.
    b) Timbering
    c) Dealing with water from any source whatsoever
    d) Backfilling as specified
    e) Disposal of surplus spoil

Measurement of volume of excavation for structures shall be calculated from the plan dimensions of the structure without allowance for working space.

The depth of excavation in pipe trenches will be measured from ground level to the invert of the pipe. Measurement for other excavations will be to the size which is required to accommodate the permanent works. A Bidder shall accordingly allow in his prices for any amount of extra excavation, which may be necessary for working space to complete the work to the satisfaction of the Project Manager.

Items are included for "Extra Over for Rock" on a volume basis. The rates shall include for breaking out and for any other additional costs and the items shall apply to work encountered within measured excavation. Different classifications have been billed separately. Rock shall be measured as a volume calculated from the thickness encountered within the plan area of a mass excavation, within the plan dimensions of a structure, or within the nominal width of a trench. The decision of the Project Manager on the classification of rock encountered in excavation shall be final and binding. **Note: Any excavation of murram in whatever form will be taken as common excavation.**

Timbering left in excavations shall only be measured for payment where it is specified or

ordered by the Project Manager.

15. When the site of any particular item of the Works has been sufficiently cleared of trees, undergrowth etc. and before any excavation or filling has been carried out, the Contractor shall carry out a survey under the supervision of the Project Manager's Representative to take, record and agree upon an adequate number of original ground levels. The data so obtained shall be used as a basis for the computation of excavation and filling. If for whatever reason the Contractor commences excavation without taking levels, the Project Manager's decision on the original ground levels to be used for computation will be final.

16. The volume of fill will be measured net to the finished levels as shown on the drawings or as amended by the Project Manager.

17. The rates for concrete shall include for making and testing concrete cubes and forwarding the results to the Project Manager. Testing to be carried out by a Test Laboratory approved by the Project Manager.

18. The rates for precast concrete paving shall include for all cutting, bedding, jointing and laying to falls.

19. The rates for precast concrete edging and kerbs shall include for formwork, concrete bed and backing, all cutting, jointing and laying.

20. All formwork must be cleaned and oiled prior to use. All exposed concrete edges shall have a 20mm chamfer unless otherwise directed. The formwork rates shall also be inclusive of all necessary box outs and cut outs for individual holes up to 1 square meter.

    The rates for forming rebates in concrete walls etc. shall include for forming pockets for the fish tail fixing cleats where required.

    Deductions from formwork quantities will be made for openings more than 1 square metre in area.

21. Formwork for upper surfaces inclined at 30 degrees or less to the horizontal is not measured and the cost of any such formwork used will be deemed to be included in the relevant concrete item rate.

22. Wrought formwork where specified will be measured to 150mm below final ground levels.

23. Items required for Structural Joints and Construction Joints shown on drawings shall be paid for as per the rates in the Bills of Quantities; the rate for providing and fixing PVC water bar is deemed to be inclusive of all joints, overlaps, junctions, welding, etc. formwork not shown on drawings shall be deemed to be included in the unit rates for concrete work.

24. All rates and sums in the Bills of Quantities shall be in Kenya Shillings and Cents.

25. A construction wayleave of up to 10 meters for the Transmission Mains will be allowed. Construction wayleave of up to 3 m for Distribution Mains will generally be allowed.

    Payment for site clearance will be based upon this width except that the Project Manager reserves the right to restrict this width due to the presence of obstructions, roads, houses and

the like. Payment shall then be according to the actual area cleared. In case additional space is required this may be made available by the Contractor at his own cost.

No claim for additional space will be entertained by the Project Manager. No claims for inconvenience and the like caused by obstruction will be entertained. The rates shall be deemed to include for reinstatement of fences, gates, etc.

26. All pipe diameters indicated in the Bills of Quantities and on Drawings are nominal. Fittings dimensions to suit size/type of pipes supplied by the Bidder and Bidder's rates are deemed to allow for this. No additional cost adjustment will be allowed.

27. Unless otherwise specified the method of measurement shall be in accordance with the Standard Method of Measurement of Civil Engineering Quantities (CESMM3) published by the Institution of Civil Engineers, London, Third Edition - 1991. In some cases, variations to this method have been made to suit local practice (enclosed). A Contractor shall be deemed to have priced the items accordingly and no claims relating to variation from the method of measurement stated in these documents shall be considered.

28. Items for buildings, electrical and mechanical works are not described using CESMM3 for clarity purposes.

29. All quantities have been measured in Metric Units.

30. Explanation of abbreviations used in the Bills of Quantities are as follows: -

L.S.	Lump Sum		**M.S**	Mild Steel
P.C.	Prime Cost		**B.L**	Bitumen Lined
E.O.	Extra Over		**Dia**	Diameter
Avg.	Average		**E.C**	Epoxy Coated
Max	Maximum		**E.L.**	Epoxy Lined
Min	Minimum		**S & S**	Socket & Spigot
n.e	Not Exceeding		**C.L**	Cement-mortar Lined
nr.	Number		**C.I**	Cast Iron
mm	Millimeter		**D.I**	Ductile Iron
m	Linear Meter		**uPVC**	Unplasticized Polyvinyl Chloride
m^2	Square Meter		**G.I**	Galvanized Iron
m^3	Cubic Meter		**G.M.S.**	Galvanized Mild Steel
Ha	Hectare		**P.E.H.**	Palothene
Drg.	Drawing		**PE**	Polyethylene
Kg.	Kilogram		**Hr.**	Hour
H.T	High Tensile		**FE/Fe**	Ferrous

31. The rates for metalwork shall include for bolts, nuts, washers and rag-bolts, fixing as specified or in accordance with the manufacturer's instructions and rectifying as specified any parts of the painted, coated or galvanized surface that may be damaged either before or after erection.

32. The rates for fixing penstocks and flap valves etc. shall include for bedding and grouting, testing for water tightness, greasing all working parts and leaving in good working order; where the

item includes supply, the rates shall also include for supplying drawings for approval before manufacture is commenced.

33. Concrete Works

a) Item : Concrete

Unit : m^3 of each class

Concrete shall be measured by the cubic meter of each class calculated from the dimensions given on the drawings or as instructed by the Project Manager. No deduction shall be made in the measurement for:

i) Bolt holes, pockets, box outs and cast-in components provided that the volume of each is less than 0.15 cubic meters;
ii) mortar beds, fillets, drip molds, rebates, recesses, grooves, chamfers and the like of 100mm total width or less;
iii) Reinforcement.

The rates for concrete shall include for the cost of:

i) Provision and transport of cement, aggregate and water;

j) Admixtures and workability agents including submission of details unless otherwise specified;

k) Batching, mixing, transporting, placing, compacting and curing;

l) Class UF1 finish;

m) Laying to sloping surfaces not exceeding 15 degrees from the horizontal and laying to falls;

n) Formwork to blinding concrete;

o) Placing and compacting against excavated surfaces where required including any additional concrete to fill overbreak or working space;

p) Complying with the requirements of the relevant Specification.

b) Item : Blinding Concrete

Unit : m^3

Blinding concrete shall be measured by the cubic meter calculated as the product of the plan area of the foundation as shown on the drawings and the instructed thickness. No deduction shall be made for openings provided that the area of each is less than 0.5 square meters. Blinding concrete over hard material shall be measured as the volume used provided that the maximum thickness of 150mm allowed for overbreak is not exceeded.

The rate for blinding concrete shall include for all costs itemized in Note 33(a) of this Preamble.

c) Item : <u>No Fines Concrete</u>

Unit : m^3

No fines concrete shall be measured by the cubic meter calculated from the dimensions given on the drawings or as instructed by the Project Manager.

The rate for no fines concrete shall include for all costs stated in Note 33(a) of this Preamble.

d) Item : <u>Unformed Surface Finishes</u>

Unit : m^2 of each class of finish

Unformed surface finishes shall be measured by the square meter from the dimensions Given on the drawings or as instructed by the Project Manager.

The rate for concrete in Notes 33(a), (b) and (c) shall include for class UF1 finish.

The rate for unformed surface finishes shall include for the cost of complying with the relevant Specification.

e) Item : <u>Formwork for Formed Surface Finishes</u>

Unit : m^2 of formwork for each class of finish for each range of inclinations

Except as stated below, formwork shall be measured by the square meter of formwork actually in contact with the finished face of the concrete. No deduction shall be made in the measurement for openings, pipes, ducts and the like, provided that the area of each is less than 0.50 square meters. Unless otherwise stated, if the volume or area of concrete has not been deducted when measuring the concrete in accordance with Notes 33(a), (b) and (c), formwork to form or box out the void shall not be measured.

Formwork less than 300mm high to edges of slabs shall be measured by the linear meter in accordance with Note 33(f) of this Preamble.

Inclined formwork shall be measured in accordance with the following classifications:

i) Horizontal: 85 to 90 degrees inclination from vertical
ii) Sloping: 10 to 85 degrees inclination from vertical

iii) Battered: 0 to 10 degrees inclination from vertical

iv) Vertical: 0 degrees

v) Sloping upper surfaces inclined at more than 15 degrees from the horizontal

Formwork required for blinding concrete; to form construction joints and shear keys for future concrete and other construction surfaces shall not be measured and the costs shall be included in the rates for other work.

Formwork to contraction and expansion joints shall be measured by the square meter on one face only. The rates shall include for the costs stated below and for forming recesses for sealant and channels for grout.

The rates for formwork shall include for the cost of submission of details, providing and transporting all materials for formwork and falsework, erection including provision of supports, fillets and chamfers 75mm and less in width, bolts, ties, fixings, cutting to waste, drilling or notching the formwork for reinforcement where required, working around pipes, ducts, conduits and water stops, temporary openings, cleaning, dressing, stripping, filling bolt holes and any remedial work and for complying with the relevant Specification.

f) Item : Formwork to Edges of Slabs

Unit : m of each class of finish

Formwork less than 300mm high to edges of slabs shall be measured by the linear meter. The

rate shall include for the costs stated in Note 33(a) of this Preamble.

g) Item : Water stops

Unit : m of each type

Water stops shall be measured by the meter run of each type.

The rate for water stops shall include for the provision, installation, jointing, any sealants required at the face of the concrete and for placing and compacting concrete around the water stop.

h) Item : Mortar

Unit : m^2

Mortar used for bedding base plates and the like shall be measured by square meter as the area of the base plate at the specified nominal thickness of bedding.

Mortar used in filling bolts pockets and the like shall not be measured separately and the costs shall be included in the rates for the bolts.

The rates for mortar shall include for the cost of providing and placing the mortar and of complying with the requirements of the relevant Specification.

i) Item : Admixture Workability and Hardening Agents

Unit : As specified in the Special Specification

Where required by the Special Specification admixtures, workability and hardening agents shall be measured and paid for in accordance with the Special Specification.

q) Item : Reinforcement

Unit: Tonne of each type for each range of diameters

Reinforcement shall be measured separately for each of the following ranges:

3.5.1. of diameter equal to or less than 16mm

3.5.2. of diameter greater than 16mm

Steel fabric reinforcement shall be measured in accordance with Note 33(k) of this Preamble.

Steel (plain and deformed bars) reinforcement shall be measured by the tonne and shall be the calculated weight of the steel required including splice lengths shown on the drawings. No allowance shall be made in the measurement for rolling margins or cutting waste. The density of steel shall be taken as 7850 kilograms per cubic meter.

The rates for reinforcement shall include for cost of providing, cutting to length, splice lengths additional to those shown on the drawings, laps, bending, hooking, waste incurred by cutting, cleaning, spacer blocks, provision and fixing of chairs or other types of supports, welding, fixing the reinforcement in position including the provision of wire or other material for supporting and tying the reinforcement in place, being reinforcement aside temporarily and straightening, placing and compacting concrete around reinforcement and for complying with the requirements of the relevant Specification.

k) Item : Fabric Reinforcement

Unit : m^2 of each type

Steel fabric reinforcement shall be measured by the square meter and shall be the calculated area excluding any allowance for laps.
The rate for steel fabric reinforcement shall include for the costs stated in Note 33(j) of this Preamble.
Sewers, Drains and Pipelines

34. The rates for pipes, pipework and specials shall include for supply of all materials, setting of concrete blocks and hardwood wedges where specified, providing any temporary support that may be necessary, preparing ends of pipes for jointing and all labour in jointing, protection to detachable joints, cleaning pipelines and rectifying as specified any damage to surface coating. The rates shall also include for all cutting of pipe's consequent upon structures, specials and fittings being constructed in the designated positions.

35. The rates for concrete surround, bed and haunching to pipes, concrete in anchor blocks to pipes, and to gully pots shall include for all formwork required and for any additional concrete the Contractor may place for his own convenience or by reason of the method of carrying out the work.

Pipes, Fittings and Valves

36. Pipes, Fittings and Valves to be provided and installed as per the relevant specifications.

Shop Drawings

37. Detailed shop drawings, in triplicate, to be provided for all items where ferrous pipe work, fittings and any metalwork i.e., penstocks, ladders etc., are indicated to be installed as outlined in the bills of quantities and drawings. These drawings to be submitted well in advance of ordering of the above materials and the billed rates are deemed to include for provision of these drawings, samples where requested, and inspection where fabricated by the Project Manager or his Representative.

Prime Cost Items

38. Attendance on nominated Sub-Contractors shall include for all or any of the following as appropriate - labour, materials and plant required for taking delivery, carting, storing, hoisting and builder's work entailed in fixing, erecting and installing as specified or in accordance with the manufacturer's instructions and all overheads and profits.

39. When, in the opinion of the Project Manager, it is reasonable to expect the Contractor to price the attendance item it will be so included in the Bills of Quantities. In all other cases it will form the subject of a Provisional Sum to be expended on a Dayworks basis.

40. Profit shall include for establishment charges, profit and any other costs not included in the attendance item.

41. The rates for the supply of any mechanical and electrical equipment shall include for the submission of factory test results.

42. Definitions of Terms used in Bill of Quantities

a) **'Provide' or 'Supply'** - shall mean all costs to cover purchase of materials in good condition, services for transaction with the supplier, supervision, transport to site of works all charges for rental, consumptions, overheads and profits throughout the Contract. It shall also include for all maintenance, insurance and handling and storage whenever applicable.

b) **'Excavate for'** - shall mean handling of any material from its incumbent position intended for specified work shown in the drawings or directed by the Project Manager and backfilling and compacting part of material after laying of pipes or erection of structures, and cart away remaining to tips to be provided by the Contractor. The cost for this work shall include all survey, supervision, labour, tools, machinery, protection of work , pumping, insurances and overheads and profits.

c) **'Laying'** - shall cover all work necessary for placing an object or material to true line and level specified in a drawing or as directed by the Project Manager.

d) **'Jointing'** - shall mean process of fixing specified material, pipes, fittings and specials together using appropriate tools, material, labour and machinery. It should cover for all work necessary to provide matching of opposite parts in size, shape and position indicated and clamps,

seating and holders to hold firmly.

e) **'Testing'** - shall mean provision of all materials, apparatus, labour, machinery, charges for the media or chemical to be used and their transport, repair of object to be tested if required, re-testing, excavation of any part for visual inspection, erection of any type all until the object has been certified as having passed the required test satisfactorily.

f) **'Install'** - shall include for all work requirements stipulated for "construction" and "piping". It will cover all expenses for the provision of labour, materials, removal from stores, complete erection, installation, supervision, site testing and commissioning as per the Specifications.

43. The unit rates for the various items listed in the BOQ shall include, except insofar as it is otherwise provided under the Contract, all labour, construction equipment, materials, erection, maintenance, supervision, insurances etc. set forth or implied in the Contract. These are all deemed to include all allowances for waste or surplus of any kind, which are not subject to measurement.

44. **The rates to be indicated in the Bills of Quantity shall be Including Kenya Government duties and taxes (including any input VAT paid on purchase of materials etc.).**

Garissa Water Supply ADC FARM 10" Borehole Buriburis Water Project					
BoQ NO. 1-PRELIMINARY AND GENERAL ITEMS					
Item	**Description**	**UNIT**	**QTY**	**RATE**	**AMOUNT**
A	**BoQ NO. 1. PRELIMINARY AND GENERAL ITEMS**				
A1	**CONTRACTUAL REQUIREMENTS**				
A 1.1	Insurance of Works (CAR)	Sum	1		
A 1.2	Insurance of Workmen (WIBA)	Sum	1		
A2	**SIGNBOARDS**				
A 2.1	Provide and maintain a project Sign Board	No.	1		
A 3.2	Allow provisional sums for project M & E, Administration for the duration of the contract including site meetings.	Sum	1	450,000	450,000.00
A4	**PROVISIONAL SUMS**				
A 4.1	Attendance upon the Engineer's staff. Provide 1Nr. qualified driver, with minimum 2 years driving experience, include all possibilities of overtime, among others. necessary for the driver to perform his/her duties.	month	3		
A 4.2	Allow for Pipe line Survey, Design & report production	Sum	1		
	Total Carried To Summary				

Garissa Water Supply ADC FARM 10" Borehole Buriburis Water Project					
Bill No.2- Road & Site Clearance					
Item	**Description**	**UNIT**	**QTY**	**RATE**	**AMOUNT**
B	**Road Clearance & Site Clearance**				
		Unit	**Quantity**	**Rate [KES]**	**Amount [KES]**
B 1.1	Access road Mechanical grading and minor Bush clearing (42,000m^2) Wet rate (8hrs a day)	Hr	20		
B 1.2	Borehole site Mechanical Heavy Bush clearing and sections on Manual bush clearing as shall be directed	m^2	33,000		
	Sub-Total				
16% VAT					
Total Carried To Summary					

Garissa Water Supply ADC FARM 10" Borehole Buriburis Water Project					
Bill No.3- Drilling 10" BOREHOLE					
Item	**Description**	**UNIT**	**QTY**	**RATE**	**AMOUNT**
C					
C1	**Preliminary**				
C 1.1	Preliminary requirements; Hydrogeological Survey, & supervision by Geologist	LS	1		
C 1.2	Preliminary requirements; WRA permit, & NEMA EIA	LS	1		
C2	**Drilling**				
C 2.1	Mobilisation of drilling unit to site, erect at position of borehole, dismantle and demobilise on completion	LS	1		
C 2.2	Mobilisation of test pumping equipment, erect, dismantle and demobilize on completion	LS	1		
C 2.3	Provide all other plant, equipment, stores, personnel materials and remove from site on completion	LS	1		
C 2.4	Allow for all costs involved in providing water for all requirements	LS	1		
C 2.5	Allow for clearance of site on completion	LS	1		
C3	**Drill bit of 14" and casing of 10"**				
C 3.1	Drilling 0 - 10 m	m	10		
C 3.2	Drilling 10 - 20 m	m	10		
C 3.3	Drilling 20 - 30 m	m	10		
C 3.4	Drilling 30 - 40 m	m	10		
C 3.5	Drilling 40 - 50 m	m	10		
C 3.6	Drilling 50 - 60 m	m	10		

C 3.9	Supply and install 254 mm plain Black Pipe casing	m	9		
C 3.10	Supply and install 254 mm slotted Black Pipe casing	m	51		
C 3.11	Prepare and place borehole bottom plug as shall be directed by Geologist	Nr	1		
C 3.12	Supply and install gravel pack with average grain size of 2 mm (approx. 6.32$m^{3)}$	ton	25		
C 3.13	Well development using air or water jetting as recommended by Hydrogeologist	Hr	6		
C 3.14	Test pumping Use a submersible pump capable of 60m^3/hr & Draw pipes of 3" pipe and head of 150m	Hr	24		
C 3.15	Recovery Test	Hr	8		
C 3.16	Supply and install 300 mm diameter well cap	LS	1		
C 3.17	Take water samples for laboratory chemical analysis-15Litres each to WRA -LAB	LS	1		
C 3.18	Borehole Completion Report	LS	1		
	Sub-Total				
	16% VAT				
	GRAND DRILING TOTAL				
	Total for 3 units Carried To Summary				

Garissa Water Supply ADC FARM 10" Borehole Buriburis Water Project					
Bill No. 4-Equipping 3No. B-Hs					
Item	**Description**	**UNIT**	**QTY**	**RATE**	**AMOUNT**
D					
D1	**Equipping**				
	Borehole Equipping				
	Allow for Supply and Installation of the following. The cost should include all the required fittings and Testing				
	Pump & Motor				
D 1.1	A submersible pump with metallic impellers complete with a three Phase Motor with capacity to pump 15 liters/sec. against a head of 150M	Nr.	1		
D 1.2	Allow for a Dol starter Control panel complete with the required fittings-Ammeter & Hour meter [or its equivalent and compatible to ditto]	Nr.	1		
	Drawdown Pipes				
D 1.3	76mm diameter High Pressure Super Heavy Duty 3m uPVC pipes. Include all the required fittings	M	60		
D 1.4	10 mm^2 x 4core submersible drop cable	m	80		

D 1.5	Electrode cable (1mm^2 x 1core)	m	200		
D 1.6	Electrodes	Nr.	2		
D 1.7	Cable splicing Kit	Nr.	1		
D 1.8	uPVC dipper pipes 1"	M	70		
D 1.9	Starter pipe 76mm	Nr.	1		
	Borehole Surface Sundries				
D 1.10	Borehole cover plate 3" complete with fittings (Pipe Clamp, Borehole tag plate-filled)	Nr.	1		
D 1.11	Junction Box [big size] complete fittings	Nr.	1		
D 1.12	Cable trunking	Nr.	10		
D 1.13	10mm^2 × 4core armored Copper cable	m	200		
D 1.14	Provide for a TPN ISOLATOR	Nr.	1		
D 1.15	3.6Hp standard control panel board with lockable box	Nr.	1		
D 1.16	Electrical and related works	Nr.	1		
D 1.17	Installation of the pump	Nr.	1		
		SUB-TOTAL			
	Plumbing Works				
Item	**Description**				
D 1.19	Fabricate flanged 8" x 3" "T"	Nr	1		
D 1.20	Supply & Install 3" water Meter Flanged	Nr	1		
D 1.21	Supply & Install 3" Non Return Valve Flanged	Nr	1		
D 1.22	Supply & Install 3" Sluice Valve Flanged PN16	Nr	1		
D 1.23	Supply Flanged 3" GI pipes of class B	Nr	7		
D 1.24	Bolts ,Nuts & Washers size 24	Nr	300		
D 1.25	Supply & Install 3" Flanged long Bend G.I	Nr	1		
D 1.26	Air Valve [ARI model] 15mm 16Bar	Nr	1		
D 1.27	3/4” sockets	Nr	1		
D 1.28	3/4" Long nipple	Nr	1		
D 1.29	3/4 equal 'T"	Nr	1		
D 1.30	3/4 tap	Nr	1		
D 1.31	Teflon tread tape	dozen	1		
D 1.32	Gasket	m^2	4		
D 1.33	Welding works	L.s	1		
D 1.34	Labour	L.s	1		
				SUB-TOTAL	
	Sanitary Seal				
	Description	**QTY**	**Unit**	**Rate**	**Amount**
M10 Grade Ratio 1:3:6	Cement	5	bags		
	Sand	0.46	m^3		
	Ballast	0.92	m^3		

	Water	200	Liters		
	Form Work	4	m^2		
	Transport	4	Trips		
	Labour	1	L.s		
		Sanitary Seal Cost			
		Summary Total for 1			
	Grand Total Equipping 3 B/hs				

Garissa Water Supply ADC FARM 10" Borehole Buriburis Water Project					
Bill No.5- Flood Proofing					
ITEM	**DESCRIPTION**	**UNIT**	**QTY**	**RATE**	**AMOUNT**
E	**FLOOD PROOFING**				
E 1.1	Gabion boxes	No.	21		
E 1.2	Hardcore	m^3	50		
E 1.3	Murrum	m^3	60		
E 1.4	Labour	L.s	1		
				TOTALS	
				16% VAT	
				Cost for 1 Unit	
		Total Carried for 3 units To Summary			

To be raised 2.5m above ground

Garissa Water Supply ADC FARM 10" Borehole Buriburis Water Project					
Bill No.6- Control Rm & Power House					
ITEM	**DESCRIPTION**	**UNIT**	**QTY**	**RATE**	**AMOUNT**
F	**CONTROL HOUSE**				
F 1	**FLOOD PROOFING**				
F 1.1	Construct Flood Proofing Structure of gabions Raised 2.5 m above Ground and as shall be directed by the Engineer (21Nr gabion (1mx2mx1m)	LS	1		
F 2	**HARDCORE**				
F 2.1	200 mm thick hardcore below floor slab	m^3	20		
F 2.2	50 mm thick murram blinding or similar	m^3	3.5		
F 2.3	Provide and place 500 gauge polythene sheet damp proof membrane on top of quarry dust	m^2	10		
F3	**CONCRETE**				
F 3.1	50 mm concrete Grade 15 for blinding	m^2	63		
F 3.2	Concrete grade 25 to strip footing	m^3	7		
F 3.3	Ditto to ground floor slab	m^3	11		
F 3.4	Ditto to 4 No plinth slabs	m^3	3		
F 3.5	Ditto to ring beams	m^3	4		
F 3.6	Provide 20 mm screed, cement and sand (1:2) to smooth finish to floor slabs	m^2	10		
F4	**FORMWORK**				
F 4.1	Sawn formwork to sides of the foundation	m^2	100		
F 4.2	Ditto to sides of walls, and entrance slab	m^2	15		
F 4.3	Ditto to beams	m^2	35		
				Sub-Total	
CONTROL HOUSE					
ITEM	**DESCRIPTION**	**UNIT**	**QTY**	**RATE**	**AMOUNT**
F5	**REINFORCEMENT BARS**				
	High Tensile to BS4449				
F 5.1	12 mm diameter	kg	180		

F 5.2	8 mm diametr	kg	100		
F 5.3	A 142 mesh	m^2	20		
F6	**BLOCK WORK**				
F 6.1	200 mm concrete block-work walling with cement mortar (1:3)	M	42		
F 6.2	Bitumen damp proof course 200 mm wide	m	42		
F 6.3	12 mm cement and sand (1:3) rendering on walls to smooth finish	m^2	230		
F 6.4	3 coats of plastic emusion paint	m^2	250		
F 6.5	Ditto but super gloss on doors, windows etc.	m^2	60		
F 6.6	200 mm hollow concrete blocks walling with cement mortar (1:3)	m^2	20		
F 6.7	200 mm Concrete Louvers walling with cement mortar (1:3)	Nr	20		
F 6.8	Termite control -Apply undertaker or its equivalent	Lt	20		
F7	**ROOF**				
F 7.1	Provide and fix in position trusses to Control & Power House	nr	20		
F 7.2	Ditto purlins	m	20		
F 7.3	Ditto super seven 3m prepainted Galvanized Sheets	nr	12		
F 7.4	Ditto pre-painted G.S close fitting ridges	m	3		
F 7.5	Ditto fascia boards size 175x25mm	m	24		
				Sub-Total	
ITEM	**DESCRIPTION**	**UNIT**	**QTY**	**RATE**	**AMOUNT**
F8	**FIXTURES**				
F 8.1	Single leaf metal dooor frame 1.5 m wide by 2.2m high and allow for 300m long R16 metal grills	nr	1		
F 8.2	Approved padlock, yale or similar	nr	1		
F 8.3	25 mm Vertical joint filler Polystrine or Bondex or similar	m	20		
	ELECTRICAL FITTINGS				
F 8.4	Provide for all the electrical fittings and accessories, sockets, internal lights & 2Nr security flood lights of 100watts	LS	1		

		Sub-Total	
		Total for control room	
		16%	
		Grand Total for Control House	

Garissa Water Supply ADC FARM 10" Borehole Buriburis Water Project					
Bill No.7 -Raising Main 8''					
Item	**Description**	**UNIT**	**QTY**	**RATE**	**AMOUNT**
G1	**Excavation**				
G1.1	Excavate trench for 200mm diameter uPVC PN 10 min depth 1.5m	m	9,600		
G1.2	Excavate trench for 150mm diameter uPVC PN 10 min depth 1.5m	m	800		
G2	**Supply, Deliver & Joint**				
G 2.1	Fabricate G.I " T" of 200mm X 76mm , G.I class B pipe flanged both ends ,& At mid point have a G.I class B 76mm flanged as shall be directed	No.	3		
G 2.2	RAISING MAIN Supply, deliver to site Lay & Joint DN 200mm diameter uPVC PN10. Include the cost for the required fittings & labour charges	M	9,600		
G 2.3	Fabricate G.I " T" of 200mm X 150mm , G.I class B pipe flanged both ends , as shall be directed	No.	1		
G 2.4	RAISING MAIN Supply, deliver to site Lay & Joint DN 150mm diameter uPVC PN10. Include the cost for the required fittings & labour charges	M	800		
G 2.5	Fabricate G.I " T" of 200mm X 150mm , G.I class B pipe flanged both ends , as shall be directed	No.	1		
G 2.6	**Tank Plumbing Works:** Supply ,deliver to site Lay & Joint Flanged DN 150mm diameter G.I PN10. Include the cost for the required fittings [Bends,Flanges Bolts Nuts Gaskets,Flange Adapter Reducer 8"x6"& labour charges]	M	21		
G3	**Filing and Compaction**				
G3.1	Backfill and compact to OGL	m	9,600		
G3.2	Backfill and compact to OGL	m	800		

G4	**Air valves**				
G 4.1	Diameter 25mm Single Air Valve as shall be instructed and sample provided [ARI-Brand]	No.	10		
G 4.2	Supply and Install Sluice Valves DN 200 PN 16 [Inclusive of All accessories and fittings]	No.	2		
G 4.2	Supply and Install Sluice Valves DN 150 PN 16 [Inclusive of All accessories and fittings]	No.	1		
				Sub Total	
G5	**VALVE CHAMBERS**				
G5.1	Provide for the construction of Standard Valve Chambers	No.	10		
G6	**MISCELLANEOUS**				
G 6.1	Mass concrete, grade 15, to all thrust blocks (rate to include for all formwork and excavation).	m^3	4		
G 6.2	Supply and fix in ground including all excavation and concrete precast concrete marker posts.	No.	5		
G 6.3	Allow cost of micro-tunnelling	L.S	1		
G 6.4	Allow cost of reinstatement	L.S	1		
				Sub Total	
G7	**Testing of Pipes**				
	Provide all necessary Labour, equipment, water and other materials and carry out work testing of mains as directed				
G 7.1	Test of Raising Main From Borehole to Tank	m	9,800		
				Sub Total	
				Total Raisin Main	
	VAT			**16%**	
				Total Carried To Summary	

Garissa Water Supply ADC FARM 10" Borehole Buriburis Water Project					
Bill No.8 -ELEVATED STEEL WATER TANK					
BoQ NO. H: ELEVATED STEEL WATER TANK-AL-IRFAN INTERGRATED ACADEMY					
ITEM	**DESCRIPTION**	**UNIT**	**QTY**	**RATE (KES)**	**AMOUNT (KES)**
H	**BOQ FOR 300 M^3 GALVERNISED STEEL TANK SECTIONAL MATERIAL SPECIFICATION**				
	1, Hot rooled section to BS 4360 Grade 43A or equivalent; 2, Cold formed section to BS 5950 part5: 1997or equivalent; 3,Bolt and nuts to BS3692 and BS4190 or equivalent; 4,Welding specifications to BS 5135 or equivalent; 5,Welding electrodes to BS 635 or equivalent; 6,Wind load to CP3 chapter V part 2 7.cube test a must for the concrete works				
H.1	**DESIGN, FABRICATE, DELIVER, ASSEMBLE/ERECT&TEST PRESSED GALVERNISED STEEL TANK**				
H1.1	Galvanised pressed steel tank 300m^3 out of embossed 6mm thick mild steel panels, complete with an Aluminium roof cover, internal bracings acces ladder, level indicator brackets inclusive ladder of all the necessary fixtures.[The TANK PANELS, COVERS, FASTENERS, INTERNAL BRACINGS AND BRACKETS SHALL be supplied in a HOT DIP GALVANIZED FINISH.]On a 15m tower of H beams & Columns .	Nr.	1		
H.2	**FOUNDATION**				
H.2.1	Design and construction of foundations of tank structure under item No.C 1.1) of Bill No. 3 above. conduct cube test	Item	1		
H.3	**TRASPORT**				
H.3.1	Transportation of all the materials for foundation ballast sand,cement and all the equipments for the erection of the tank and tower to the site include materials Prices	Item	1		
H.4	**PLUMBING**				
H.4.1	INLET **:** 6" G.I PIPE CLASS B FLANGED (Inclusive of Labour & all fittings accessories)	Item	1		

H.4.2	INLET 6" S.VALVE PN 16-BY PASS (Inclusive of Labour & all fittings accessories) -Construct a Valve Chamber	Item	1		
H.4.3	OUTLET: 6" G.I PIPE CLASS B FLANGED-Inclusive of all plumbing works of delivery pipe	Item	1		
H.4.4	WASHOUT 4" G.I PIPE CLASS B Inclusive of all plumbing works	m	15		
H.4.5	WASHOUT 4" S.VALVE (Inclusive of all fittings accessories)	Nr	1		
H.4.6	Fabricate a Flanged 6" G.I "T" with extended flanged piped of 6" & 4" fixed at the outlet ; Supply & install S.Valves of 6" & 4" ,as shall be directed;Construct Valve chamber	Item	1		
H.4.7	Over Flow pipe to extend past the Foundation .	Item	1		
H.4.8	Allow for stone pitching in cement /sand mortar 1:3 to protect foundation as directed by the Engineer.	Item	2		
H.4.9	Testing & Commissioning	Item	1		
		Sub-Total			
		Total Carried To Summary			

Garissa Water Supply ADC FARM 10" Borehole Buriburis Water Project					
Bill No.9 -Last mile connectivity					
J					
No.	**Distribution Works Plumbing Works**	**Unit**	**Quantity**	**Rate**	**Amount**
1	Flange Adapter 6"	Nr	4		
2	Flange Adapter 4"	Nr	16		
3	Flange Adapter 3"	Nr	20		
4	Fabricate Flanged "T" 4x4	Nr	4		
5	Sluice Valve 3" Plus Accessories	Nr	8		
6	Sluice Valve 4" Plus Accessories	Nr	8		
7	uPVC 3/4" Pipe Class C	m	3,000		
8	uPVC 1" Pipe Class C	m	3,600		
9	uPVC 2" Pipe Class C	m	4,200		
10	uPVC 3" Pipe Class C	m	4,800		
11	uPVC 4" Pipe Class C	m	4,800		
12	uPVC 6" Pipe Class C	m	3,000		
13	Tangit 100 ml tubes	Dozen	10		
14	3/4" complete Tap Stand	Nr	1500		
15	Water Meter 3/4" class C	Nr	500		
16	Water Meter Fittings	Item	500		
17	Saddle Connectors 2X3/4	Nr	1500		
18	Coupling 6 inch	Nr	20		
19	Coupling 4 inch	Nr	12		
20	Reducer 2x3/4	Nr	100		
21	Teflon Thread tapes	Dozen	2		
22	Valve Socket 2"	Nr	20		
23	Valve Socket 3"	Nr	20		
24	Gate Valve 2"	Nr	10		
25	Gate Valve 3"	Nr	10		
26	Gate Valve 4"	Nr	10		
27	Labour	Item	1		
28	Miscellaneous	Item	1	750,000.00	750,000.00
				Total Carried To Summary	

Garissa Water Supply ADC FARM 10" Borehole Buriburis Water Project					
Bill No.10 -Washroom					
Item	**Description**	**UNIT**	**QTY**	**RATE**	**AMOUNT**
K					
K 1	**GENERAL ITEMS**				
K 1.1	Setting out the works	Sum	1		
K 2	**Structure**				
K 2.1	Construct a slab to receive a Vertical septic tank {Pastic Roto brand] of 4.6m^3 capacity and construct walling to contain the tank and overhead slab with opening for manual exhausting.	L.s	1		
K 2.2	Supply and place ,plumb & fix 4.6m^3 plastic tank as a septic tank as shall be directed.Supply and install on site a Vertical septic tank {Pastic Roto brand] of 4.6m^3 capacity	Nr	1		
K 2.3	Construct the washroom superstructure raised to aprox 1.5m above ground ,raised structure with access of stairs,slab,and walling with open roof space.	Nr	1		
K 2.4	Supply and fix SATO squat pan toilet inclusive of Cistern	Nr	1		
K 2.5	Supply and Fix shower	Nr	1		
K 2.6	Plumb works of supply water to the washroom using HDPE of DN 19 mm PN 6	Item	1		
K 2.7	Supply and Fix overhead reservoir tank of 1m^3 plastic tank as shall be directed, secure by use of welded D12 bars.	nr	1		
K 2.8	Cement/sand 20mm screed on walkway slab	m^2	5		
K 2.9	10mm thick 1:3 cement/sand plaster to interior surface of superstructure walling	m^2	10		
K 2.10	Painting plastered interior surface of superstructure walling with 3 coats(1 u/c + 2 f/c) of plastic emulsion paint	m^2	10		
	Doors and Padlocks				

K 2.11	Purposely fabricated metal door (rate to include for 100x50mm door frames and all iron mongery	No.	1		
K 2.12	Provisional sum for purchase of locks and padlocks as directed by the supervisor	Sum	1		
K 2.13	Nominal bore 100mm medium gauge plastics vent pipe (rate to include for fly screen at the top)	No.	1		
		Sub-Total			
	VAT	16%			
	Total Carried To Summary				

Garissa Water Supply ADC FARM 10" Borehole Buriburis Water Project					
Bill No.11- Borehole Site Fencing					
ITEM	**DESCRIPTION**	**UNIT**	**QTY**	**RATE**	**AMOUNT**
L	**FENCING**				
L 1.1	Provide and install 2.4m high gauge 14 chainlink complete with 12.5 gauge 3 No. strand galvanized barbed wire fencing with cranked (100x125)mm cranked precast concrete post at 3m centers mortised in mass concrete surround (1:2:4)	m	1100		
L1.2	Cranked precast concrete (100mm x125mm) 3m high	nr	350		
L 1.3	Bracing posts	nr	200		
L1.4	Repair the existing Gate	nr	1		
	VAT	16%			
	Total Carried To Summary				

Garissa Water Supply ADC FARM 10" Borehole Buriburis Water Project					
Bill No.12 -Raising Main 4''-HDPE PN 12.5 to Modika Tank					
Item	**Description**	**UNIT**	**QTY**	**RATE**	**AMOUNT**
M.1					
M 1.1	Supply & deliver for HDPE installation Hydraulic Butt-Welding Machine Model WP315A Pro.to revert to GAWASCO after the project-As per the specs	Nr	1		
M 1.2	Supply & Deliver 3phase Generator for use with Ditto	Nr	1		
M2	**Excavation**				
M2.1	Excavate trench for 110mm diameter HDPE pipe PN12.5 min depth 1.5m	m	6,500		
M3	**Supply ,Deliver & Joint**				
M 3.1	Cut Epoxy coated 4" pipe and Weld Flange to receive 4" HDPE stub end PN16 .Joint with bolts nuts as shall be directed .	No.	2		
M 3.2	RAISING MAIN to Modika Tank Supply ,deliver to site. Lay & Joint by Butt fusion HDPE 4" pipe PN12.5 . Include the cost for the required fittings & labour charges	M	6,500		
M 3.3	**Tank Plumbing Works:** Supply ,deliver to site Lay & Joint Flanged DN 150mm diameter G.I PN10. Include the cost for the required fittings [Bends,Flanges Bolts Nuts Gaskets,Flange Adapter & labour charges]	L.s	1		
M4	**Filing and Compaction**				
M4.1	Backfill and compact to OGL	m	6,500		
M5	**Sluice valves**				
M 5.2	Supply and Install Sluice Valves DN 100 PN 16 [Inclusive of All accessories and fittings]	No.	2		
M 5.1	Supply and Install Sluice Valves DN 76 PN 16 [Inclusive of All accessories and fittings]	No.	1		
				Sub Total	
M6	**Excavation**				

M6.1	Excavate for Main pipe to Modika Barracks trench for 3" diameter HDPE pipe PN12.5 with min depth 1.5m	m	600		
M7	**Supply, Deliver & Joint**				
M 7.1	HDPE compression coupler 3" for joining HDPE 3" pipe as shall be directed.	No.	8		
M 7.2	Main pipe to Modika Barracks Supply, deliver to site. Lay & Joint by compression couplers HDPE 3" pipe PN12.5. Include the cost for the required fittings & labour charges	M	600		
M8	**Filing and Compaction**				
M8.1	Backfill and compact to OGL	m	600		
M9	**Air valves**				
M 9.1	Diameter 25mm Single Air Valve as shall be instructed and sample provided [ARI-Brand]	No.	12		
				Sub Total	
M 10	**VALVE CHAMBERS**				
M 10.1	Provide for the construction of Standard Valve Chambers	No.	12		
M 11	**MISCELLANEOUS**				
M 11.1	Mass concrete, grade 15, to all thrust blocks (rate to include for all formwork and excavation).	m^3	4		
M 11.2	Supply and fix in ground including all excavation and concrete precast concrete marker posts.	No.	5		
M 11.3	Allow cost of micro-tunnelling	L.S	1		
M 11.4	Allow cost of reinstatement	L.S	1		
				Sub Total	
M12	**Testing of Pipes**				
	Provide all necessary Labour, equipment, water and other materials and carry out work testing of mains as directed				
M 12.1	Test of Main	m	7,100		
				Sub Total	
				Total Raisin Main	
	VAT			**16%**	
				Total Carried To Summary	

Garissa Water Supply ADC FARM 10" Borehole Buriburis Water Project					
Bill No.13- Upgrade Transformer at the Borehole Site					
ITEM	**DESCRIPTION**	**UNIT**	**QTY**	**RATE**	**AMOUNT**
M	**ELECTRICITY**				
M 1.1	Apply on behalf of GAWASCO Transformer Upgrade Electricity to power the Borehole site,3 phase power [Electricity concrete poles, Power lines, separate meters, Transformer] capable of running 6 motors of 18.5 Kw, with each borehole having independent meter	Item	1		
	VAT	16%			
	Total Carried To Summary				

Garissa Water Supply ADC FARM 10" Boreholes Buriburis Water Project		
	SUMMARY	
ITEM NO.	**DESCRIPTION**	**BOQ AMOUNT**
1	**Bill No. 1-PRELIMINARY AND GENERAL ITEMS**	
2	**Bill No.2- Road & Site Clearance**	
3	**Bill No.3- Drilling 10" BOREHOLE**	
4	**Bill No. 4-Equipping 3No. B-Hs**	
5	**Bill No.5- Flood Proofing**	
6	**Bill No.6- Control Rm & Power House**	
7	**Bill No.7 -Raising Main 8''**	
8	**Bill No.8 -Elevated Tank**	
9	**Bill No.9 -Last Mile connectivity**	
10	**Bill No.10 -Washroom**	
11	**Bill No.11- Borehole Site Fencing**	
12	**Bill No.12 -Raising Main 4''-HDPE PN 12.5 to Modika Tank**	
13	**Bill No.13- Upgrading Transformer**	
	Sub Total.	
14	**Administrative and supervision Costs**	**2,508,920.39**
	Sub Total.	
	Add 0.03% Public Procurement Capacity Building Levy Order 2023) Exclusive of all applicable taxes)	
	GRAND TOTAL CARRIED TO FORM OF TENDER	

PART III - CONDITIONS OF CONTRACT AND CONTRACT FORMS

SECTION VIII - GENERAL CONDITIONS OF CONTRACT

[Name of Procuring Entity]	**COUNTY GOVERNMENT OF GARISSA.** **P.O.BOX 563 – 70100 GARISSA,** **KENYA**
[Name of Contract]	**PROPOSED BURBURIS WATER CONNECTIONS AT GALBERT WARD IN GARISSA COUNTY.**
[Project Manager Name and Address]	**GARISSA WATER AND SEWERAGE COMPANY,** **P.O Box 563-70100, GARISSA**

These General Conditions of Contract (GCC), read in conjunction with the Special Conditions of Contract (SCC) and other documents listed therein, should be a complete document expressing fairly the rights and obligations of both parties.

These General Conditions of Contract have been developed on the basis of considerable international experience in the drafting and management of contracts, bearing in mind a trend in the construction industry towards simpler, more straightforward language.

The GCC can be used for both smaller admeasurement contracts and lump sum contracts.

General Conditions of Contract

A. General

1. Definitions

1.1 Bold face type is used to identify defined terms.

a) **The Accepted Contract** Amount means the amount accepted in the Letter of Acceptance for the execution and completion of the Works and the remedying of any defects.

b) **The Activity Schedule** is a schedule of the activities comprising the construction, installation, testing, and commissioning of the Works in a lump sum contract. It includes a lump sum price for each activity, which is used for valuations and for assessing the effects of Variations and Compensation Events.

c) **The Adjudicator** is the person appointed jointly by the Procuring Entity and the Contractor to resolve disputes in the first instance, as provided for in GCC 23.

d) **Bill of Quantities** means the priced and completed Bill of Quantities forming part of the Bid.

e) **Compensation Events** are those defined in GCC Clause 42 hereunder.

f) **The Completion Date** is the date of completion of the Works as certified by the Project Manager, in accordance with GCC Sub-Clause 53.1.

g) **The Contract** is the Contract between the Procuring Entity and the Contractor to execute, complete, and maintain the Works. It consists of the documents listed in GCC Sub-Clause 2.3 below.

h) **The Contractor** is the party whose Bid to carry out the Works has been accepted by the Procuring Entity.

i) **The Contractor's Bid** is the completed bidding document submitted by the Contractor to the Procuring Entity.

j) **The Contract Price** is the Accepted Contract Amount stated in the Letter of Acceptance and thereafter as adjusted in accordance with the Contract.

k) **Days** are calendar days; months are calendar months.

l) **Day work**s are varied work inputs subject to payment on a time basis for the Contractor's employees and Equipment, in addition to payments for associated Materials and Plant.

m) **ADefect** is any part of the Works not completed in accordance with the Contract.

n) **The Defects** Liability Certificate is the certificate issued by Project Manager upon correction of defects by the Contractor.

o) **The Defects Liability Period** is the period **named in the SCC** pursuant to Sub-Clause 34.1 and calculated from the Completion Date.

p) **Drawings** means the drawings of the Works, as included in the Contract, and any additional and

modified drawings issued by (or on behalf of) the Procuring Entity in accordance with the Contract, include calculations and other information provided or approved by the Project Manager for the execution of the Contract.

q) **The Procuring Entity** is the party who employs the Contractor to carry out the Works, **as specified in the SCC,** who is also the Procuring Entity.

r) **Equipmen**t is the Contractor's machinery and vehicles brought temporarily to the Site to construct the Works.

s) **"In writing" or "written"** means hand-written, type-written, printed or electronically made, and resulting in a permanent record;

t) The Initial Contract Price is the Contract Price listed in the Procuring Entity's Letter of Acceptance.

u) **The Intended Completion Date** is the date on which it is intended that the Contractor shall complete the Works. The Intended Completion Date is **specified in the SCC**. The Intended Completion Date may be revised only by the Project Manager by issuing an extension of time or an acceleration order.

v) **Materials** are all supplies, including consumables, used by the Contractor for incorporation in the Works.

w) **Plant i**s any integral part of the Works that shall have a mechanical, electrical, chemical, or biological function.

x) **The Project Manager** is the person **named in the SCC** (or any other competent person appointed by the Procuring Entity and notified to the Contractor, to act in replacement of the Project Manager) who is responsible for supervising the execution of the Works and administering the Contract.

y) **SCC** means Special Conditions of Contract.

z) **The Site** is the area of the works as **defined as such in the SCC**.

aa) **Site Investigation Reports** are those that were included in the bidding document and are factual and interpretative reports about the surface and subsurface conditions at the Site.

bb) **Specification** means the Specification of the Works included in the Contract and any modification or addition made or approved by the Project Manager.

cc) **The Start Date** is **given in the SCC**. It is the latest date when the Contractor shall commence execution of the Works. It does not necessarily coincide with any of the Site Possession Dates.

dd) **A Subcontractor** is a person or corporate body who has a Contract with the Contractor to carry out a part of the work in the Contract, which includes work on the Site.

ee) **Temporary Works** are works designed, constructed, installed, and removed by the Contractor that are needed for construction or installation of the Works.

ff) **A Variation** is an instruction given by the Project Manager which varies the Works.

gg) **The Works** are what the Contract requires the Contractor to construct, install, and turn over to the Procuring Entity, **as defined in the SCC**.

2. Interpretation

2.1 In interpreting these GCC, words indicating one gender include all genders. Words indicating the singular also include the plural and words indicating the plural also include the singular. Headings have no significance. Words have their normal meaning under the language of the Contract unless specifically defined. The Project Manager shall provide instructions clarifying queries about these GCC.

2.2 If sectional completion is specified in the SCC, references in the GCC to the Works, the Completion Date, and the Intended Completion Date apply to any Section of the Works (other than references to the Completion Date and Intended Completion Date for the whole of the Works).

2.3 The documents forming the Contract shall be interpreted in the following order of priority:

a) Agreement,
b) Letter of Acceptance,
c) Contractor's Bid,
d) Special Conditions of Contract,
e) General Conditions of Contract, including Appendices,
f) Specifications,
g) Drawings,
h) Bill of Quantities[6], and
i) any other document **listed in the SCC** as forming part of the Contract.

[6] *In lump sum contracts, delete "Bill of Quantities" and replace with "Activity Schedule."*

3. Language and Law

3.1 The language of the Contract is English Language and the law governing the Contract are the Laws of Kenya.

3.2 Throughout the execution of the Contract, the Contractor shall comply with the import of goods and services prohibitions in the Procuring Entity's Country when

a) as a matter of law or official regulations, Kenya prohibits commercial relations with that country; or
b) by an act of compliance with a decision of the United Nations Security Council taken under Chapter VII of the Charter of the United Nations, Kenya prohibits any import of goods from that country or any payments to any country, person, or entity in that country.

4. Project Manager's Decisions

4.1 Except where otherwise specifically stated, the Project Manager shall decide contractual matters between the Procuring Entity and the Contractor in the role representing the Procuring Entity.

5. Delegation

5.1 Otherwise **specified in the SCC,** the Project Manager may delegate any of his duties and responsibilities to other people, except to the Adjudicator, after notifying the Contractor, and may revoke any delegation after notifying the Contractor.

6. Communications

6.1 Communications between parties that are referred to in the Conditions shall be effective only when in writing. A notice shall be effective only when it is delivered.

7. Subcontracting

7.1 The Contractor may subcontract with the approval of the Project Manager but may not assign the Contract without the approval of the Procuring Entity in writing. Subcontracting shall not alter the Contractor's obligations.

8. Other Contractors

8.1 The Contractor shall cooperate and share the Site with other contractors, public authorities, utilities, and the Procuring Entity between the dates given in the Schedule of Other Contractors, as **referred to in the SCC.** The Contractor shall also provide facilities and services for them as described in the Schedule. The Procuring Entity may modify the Schedule of Other Contractors and shall notify the Contractor of any such modification.

9. Personnel and Equipment

9.1 The Contractor shall employ the key personnel and use the equipment identified in its Bid, to carry out the Works or other personnel and equipment approved by the Project Manager. The Project Manager shall approve any proposed replacement of key personnel and equipment only if their relevant qualifications or characteristics are substantially equal to or better than those proposed in the Bid.

9.2 If the Project Manager asks the Contractor to remove a person who is a member of the Contractor's staff or work force, stating the reasons, the Contractor shall ensure that the person leaves the Site within seven days and has no further connection with the work in the Contract.

9.3 If the Procuring Entity, Project Manager or Contractor determines, that any employee of the Contractor be determined to have engaged in Fraud and Corruption during the execution of the Works, then that employee shall be removed in accordance with Clause 9.2 above.

10. Procuring Entity's and Contractor's Risks

10.1 The Procuring Entity carries the risks which this Contract states are Procuring Entity's risks, and the Contractor carries the risks which this Contract states are Contractor's risks.

11. Procuring Entity's Risks

11.1 From the Start Date until the Defects Liability Certificate has been issued, the following are Procuring Entity's risks:

a) The risk of personal injury, death, or loss of or damage to property (excluding the Works, Plant, Materials, and Equipment), which are due to
   i) use or occupation of the Site by the Works or for the purpose of the Works, which is the unavoidable result of the Works or
   ii) Negligence, breach of statutory duty, or interference with any legal right by the Procuring Entity or by any person employed by or contracted to him except the Contractor.

b) The risk of damage to the Works, Plant, Materials, and Equipment to the extent that it is due to a fault of the Procuring Entity or in the Procuring Entity's design, or due to war or radioactive contamination directly affecting the country where the Worksare to be executed.

11.2 From the Completion Date until the Defects Liability Certificate has been issued, the risk of loss of or damage to the Works, Plant, and Materials is a Procuring Entity's risk except loss or damage due to

aa) a Defect which existed on the Completion Date,

bb) an event occurring before the Completion Date, which was not itself a Procuring Entity's risk, or

b) the activities of the Contractor on the Site after the Completion Date.

12. Contractor's Risks

12.1 From the Starting Date until the Defects Liability Certificate has been issued, the risks of personal injury, death, and loss of or damage to property (including, without limitation, the Works, Plant, Materials, and Equipment) which are not Procuring Entity's risks are Contractor's risks.

13. Insurance

13.1 The Contractor shall provide, in thejoint names of the Procuring Entityandthe Contractor, insurance cover from the Start Date to the end of the Defects Liability Period, in the amounts and deductibles **stated in the SCC** for the following events which are due to the Contractor's risks:

a) loss of or damage to the Works, Plant, and Materials;
b) loss of or damage to Equipment;
c) loss of or damage to property (except the Works, Plant, Materials, and Equipment) in connection with the Contract; and
d) Personal injury or death.

13.2 Policies and certificates for insurance shall be delivered by the Contractor to the Project Manager for the Project Manager's approval before the Start Date. All such insurance shall provide for compensation to be payable in the types and proportions of currencies required to rectify the loss or damage incurred.

13.3 If the Contractor does not provide any of the policies and certificates required, the Procuring Entity may affect the insurance which the Contractor should have provided and recover the premiums the Procuring Entity has paid from payments otherwise due to the Contractor or, if no payment is due, the payment of the premiums shall be a debt due.

13.4 Alterations to the terms of an insurance shall not be made without the approval of the Project Manager.

13.5 Both parties shall comply with any conditions of the insurance policies.

14. Site Data

14.1 The Contractor shall be deemed to have examined any Site Data **referred to in the SCC**, supplemented by any information available to the Contractor.

15. Contractor to Construct the Works

15.1 The Contractor shall construct and install the Works in accordance with the Specifications and Drawings.

16. The Works to Be Completed by the Intended Completion Date

16.1 The Contractor may commence execution of the Works on the Start Date and shall carry out the Works in accordance with the Program submitted by the Contractor, as updated with the approval of the Project Manager, and complete them by the Intended Completion Date.

17. Approval by the Project Manager

17.1 The Contractor shall submit Specifications and Drawings showing the proposed Temporary Works to the Project Manager, for his approval.

17.2 The Contractor shall be responsible for design of Temporary Works.

17.3 The Project Manager's approval shall not alter the Contractor's responsibility for design of the Temporary Works.

17.4 The Contractor shall obtain approval of third parties to the design of the Temporary Works, where required.

17.5 All Drawings prepared by the Contractor for the execution of the temporary or permanent Works, are subject to prior approval by the Project Manager before this use.

18. Safety

18.1 The Contractor shall be responsible for the safety of all activities on the Site.

19. Discoveries

19.1 Anything of historical or other interest or of significant value unexpectedly discovered on the Site shall be the property of the Procuring Entity. The Contractor shall notify the Project Manager of such discoveries and carry out the Project Manager's instructions for dealing with them.

20. Possession of the Site

20.1 The Procuring Entity shall give possession of all parts of the Site to the Contractor. If possession of a part is not given by the date **stated in the SCC,** the Procuring Entity shall be deemed to have delayed the start of the relevant activities, and this shall be a Compensation Event.

21. Access to the Site

21.1 The Contractor shall allow the Project Manager and any person authorized by the Project Manager access to the Site and to any place where work in connection with the Contract is being carried out or is intended to be carried out.

22. Instructions, Inspections and Audits

22.1 The Contractor shall carry out all instructions of the Project Manager which comply with the applicable laws where the Site is located.

22.2 The Contractor shall keep and shall make all reasonable efforts to cause its Subcontractors and sub-consultants to keep, accurate and systematic accounts and records in respect of the Works in such form and details as will clearly identify relevant time changes and costs.

22.3 The Contractor shall permit and shall cause its subcontractors and sub-consultants to permit, the Procuring Entity and/or persons appointed by the Public Procurement Regulatory Authority to inspect the Site and/or the accounts and records relating to the procurement process, selection and/or contract execution, and to have such accounts and records audited by auditors appointed by the Public Procurement Regulatory Authority. The Contractor's and its Subcontractors' and sub-consultants' attention is drawn to Sub-Clause 25.1 (Fraud and Corruption) which provides, inter alia, that acts intended to materially impede the exercise of the Public Procurement Regulatory Authority's inspection and audit rights constitute a prohibited practice subject to contract termination (as well as to a determination of ineligibility pursuant to the Public Procurement Regulatory Authority's prevailing sanctions procedures).

23. Appointment of the Adjudicator

23.1 The Adjudicator shall be appointed jointly by the Procuring Entity and the Contractor, at the time of the Procuring Entity's issuance of the Letter of Acceptance. If, in the Letter of Acceptance, the Procuring Entity does not agree on the appointment of the Adjudicator, the Procuring Entity will request the Appointing Authority designated in the SCC, to appoint the Adjudicator within 14 days of receipt of such request.

23.2 Should the Adjudicator resign or die, or should the Procuring Entity and the Contractor agree that the Adjudicator is not functioning in accordance with the provisions of the Contract, a new Adjudicator shall be jointly appointed by the Procuring Entity and the Contractor. In case of disagreement between the Procuring Entity and the Contractor, within 30 days, the Adjudicator shall be designated by the Appointing Authority designated in the SCC at the request of either party, within 14 days of receipt of such request.

24. Settlement of Claims and Disputes

24.1 Contractor's Claims

24.1.1 If the Contractor considers itself to be entitled to any extension of the Time for Completion and/or any additional payment, under any Clause of these Conditions or otherwise in connection with the Contract, the Contractor shall give Notice to the Project Manager, describing the event or circumstance giving rise to the claim. The notice shall be given as soon as practicable, and not later than 30 days after the Contractor became aware, or should have become aware, of the event or circumstance.

24.1.2 If the Contractor fails to give notice of a claim within such period of 30 days, the Time for Completion shall not be extended, the Contractor shall not be entitled to additional payment, and the Procuring Entity shall be discharged from all liability in connection with the claim. Otherwise, the following provisions of this Sub- Clause shall apply.

24.1.3 The Contractor shall also submit any other notices which are required by the Contract, and supporting particulars for the claim, all as relevant to such event or circumstance.

24.1.4 The Contractor shall keep such contemporary records as may be necessary to substantiate any claim, either on the Site or at another location acceptable to the Project Manager. Without admitting the Procuring Entity's liability, the Project Manager may, after receiving any notice under this Sub-Clause, monitor the record- keeping and/or instruct the Contractor to keep further contemporary records. The Contractor shall permit the Project Manager to inspect all these records and shall (if instructed) submit copies to the Project Manager.

24.1.5 Within 42 days after the Contractor became aware (or should have become aware) of the event or circumstance giving rise to the claim, or within such other period as may be proposed by the Contractor and approved by the Project Manager, the Contractor shall send to the Project Manager a fully detailed claim which includes full supporting particulars of the basis of the claim and of the extension of time and/or additional payment claimed. If the event or circumstance giving rise to the claim has a continuing effect:

a) this fully detailed claim shall be considered as interim;
b) the Contractor shall send further interim claims at monthly intervals, giving the accumulated delay and/or amount claimed, and such further particulars as the Project Manager may reasonably require; and
c) the Contractor shall send a final claim within 30 days after the end of the effects resulting from the event or circumstance, or within such other period as may be proposed by the Contractor and approved by the Project Manager.

24.1.6 Within 42 days after receiving a Notice of a claim or any further particulars supporting a previous claim, or within such other period as may be proposed by the Project Manager and approved by the Contractor, the Project Manager shall respond with approval, or with disapproval and detailed comments. He may also request any necessary further particulars but shall nevertheless give his response on the principles of the claim within the above defined time period.

24.1.7 Within the above defined period of 42 days, the Project Manager shall proceed in accordance with Sub-Clause

24.1.8 [Determinations] to agree or determine (i) the extension (if any) of the Time for Completion (before or after its expiry) in accordance with Sub-Clause 8.4 [Extension of Time for Completion], and/or (ii) the additional payment (if any) to which the Contractor is entitled under the Contract.

24.1.9 Each Payment Certificate shall include such additional payment for any claim as has been reasonably substantiated as due under the relevant provision of the Contract. Unless and until the particulars supplied are sufficient to substantiate the whole of the claim, the Contractor shall only be entitled to payment for such part of the claim as he has been able to substantiate.

24.1.10 If the Project Manager does not respond within the timeframe defined in this Clause, either Party may consider that the claim is rejected by the Project Manager and any of the Parties may refer to Arbitration in accordance with Sub-Clause 24.4 [Arbitration].

24.1.11 The requirements of this Sub-Clause are in addition to those of any other Sub-Clause which may apply to a claim. If the Contractor fails to comply with this or another Sub-Clause in relation to any claim, any extension of time and/or additional payment shall take account of the extent (if any) to which the failure has prevented or prejudiced proper investigation of the claim, unless the claim is excluded under the second paragraph of this Sub-Clause 24.3.

24.2 Amicable Settlement

24.2.1 Where a notice of a claim has been given, both Parties shall attempt to settle the dispute amicably before the commencement of arbitration. However, unless both Parties agree otherwise, the Party giving a notice of a claim in accordance with Sub-Clause 24.1 above should move to commence arbitration after the fifty-sixth day from the day on which a notice of a claim was given, even if no attempt at an amicable settlement has been made.

24.3 Matters that may be referred to arbitration

24.3.1 Notwithstanding anything stated herein the following matters may be referred to arbitration before the practical completion of the Works or abandonment of the Works or termination of the Contract by either party:

a) The appointment of a replacement Project Manager upon the said person ceasing to act.
b) Whether or not the issue of an instruction by the Project Manager is empowered by these Conditions.
c) Whether or not a certificate has been improperly withheld or is not in accordance with these Conditions.
e) Any dispute arising in respect of war risks or war damage.
f) All other matters shall only be referred to arbitration after the completion or alleged completion of the Works or termination or alleged termination of the Contract, unless the Procuring Entity and the Contractor agree otherwise in writing.

24.4 Arbitration

24.4.1 Any claim or dispute between the Parties arising out of or in connection with the Contract not settled amicably in accordance with Sub-Clause 24.3 shall be finally settled by arbitration.

24.4.2 No arbitration proceedings shall be commenced on any claim or dispute where notice of a claim or dispute has not been given by the applying party within ninety days of the occurrence or discovery of the matter or issue giving rise to the dispute.

24.4.3 Notwithstanding the issue of a notice as stated above, the arbitration of such a claim or dispute shall not commence unless an attempt has in the first instance been made by the parties to settle such claim or dispute amicably with or without the assistance of third parties. Proof of such attempt shall be required.

24.4.4 The Arbitrator shall, without prejudice to the generality of his powers, have powers to direct such measurements, computations, tests or valuations as may in his opinion be desirable in order to determine the rights of the parties and assess and award any sums which ought to have been the subject of or included in any certificate.

24.4.5 The Arbitrator shall, without prejudice to the generality of his powers, have powers to open up, review and revise any certificate, opinion, decision, requirement or notice and to determine all matters in dispute which shall be submitted to him in the same manner as if no such certificate, opinion, decision requirement or notice had been given.

24.4.6 The arbitrators shall have full power to open up, review and revise any certificate, determination, instruction, opinion or valuation of the Project Manager, relevant to the dispute. Nothing shall disqualify representatives of the Parties and the Project Manager from being called as a witness and giving evidence before the arbitrators on any matter whatsoever relevant to the dispute.

24.4.7 Neither Party shall be limited in the proceedings before the arbitrators to the evidence, or to the reasons for dissatisfaction given in its Notice of Dissatisfaction.

24.4.8 Arbitration may be commenced prior to or after completion of the Works. The obligations of the Parties, and the Project Manager shall not be altered by reason of any arbitration being conducted during the progress of the Works.

24.4.9 The terms of the remuneration of each or all the members of Arbitration shall be mutually agreed upon by the Parties when agreeing the terms of appointment. Each Party shall be responsible for paying one-half of this remuneration.

24.5 Arbitration with National Contractors

24.5.1 If the Contract is with national contractors, arbitration proceedings will be conducted in accordance with the Arbitration Laws of Kenya. In case of any claim or dispute, such claim or dispute shall be notified in writing by either party to the other with a request to submit it to arbitration and to concur in the appointment of an Arbitrator within thirty days of the notice. The dispute shall be referred to the arbitration and final decision of a person to be agreed between the parties. Failing agreement to concur in the appointment of an Arbitrator, the Arbitrator shall be appointed, on the request of the applying party, by the Chairman or Vice Chairman of any of the following professional institutions;

i) Architectural Association of Kenya
ii) Institute of Quantity Surveyors of Kenya
iii) Association of Consulting Engineers of Kenya
iv) Chartered Institute of Arbitrators (Kenya Branch)
v) Institution of Engineers of Kenya

24.5.2 The institution written to first by the aggrieved party shall take precedence over all other institutions.

24.6 Alternative Arbitration Proceedings

24.6.1 Alternatively, the Parties may refer the matter to the Nairobi Centre for International Arbitration (NCIA) which offers a neutral venue for the conduct of national and international arbitration with commitment to providing institutional support to the arbitral process.

24.7 Failure to Comply with Arbitrator's Decision

24.7.1 The award of such Arbitrator shall be final and binding upon the parties.

24.7.2 In the event that a Party fails to comply with a final and binding Arbitrator's decision, then the other Party may, without prejudice to any other rights it may have, refer the matter to a competent court of law.

24.8 Contract operations to continue

24.8.1 Notwithstanding any reference to arbitration herein,

a) the parties shall continue to perform their respective obligations under the Contract unless they otherwise agree; and
b) the Procuring Entity shall pay the Contractor any monies due the Contractor.

25. Fraud and Corruption

25.1 The Government requires compliance with the country's Anti-Corruption laws and its prevailing sanctions policies and procedures as set forth in the Constitution of Kenya and its Statutes.

25.2 The Procuring Entity requires the Contractor to disclose any commissions or fees that may have been paid or are to be paid to agents or any other party with respect to the bidding process or execution of the Contract. The information disclosed must include at least the name and address of the agent or other party, the amount and currency, and the purpose of the commission, gratuity or fee.

B. Time Control

26. Program

26.1 Within the time stated in the SCC, after the date of the Letter of Acceptance, the Contractor shall submit to the Project Manager for approval a Program showing the general methods, arrangements, order, and timing for all the activities in the Works. In the case of a lump sum contract, the activities in the Program shall be consistent with those in the Activity Schedule.

26.2 An update of the Program shall be a program showing the actual progress achieved on each activity and the effect of the progress achieved on the timing of the remaining work, including any changes to the sequence of the activities.

26.3 The Contractor shall submit to the Project Manager for approval an updated Program at intervals no longer than the period stated in the SCC. If the Contractor does not submit an updated Program within this period, the Project Manager may withhold the amount stated in the SCC from the next payment certificate and continue to withhold this amount until the next payment after the date on which the overdue Program has been submitted. In the case of a lump sum contract, the Contractor shall provide an updated Activity Schedule within 14 days of being instructed to by the Project Manager.

26.4 The Project Manager's approval of the Program shall not alter the Contractor's obligations. The Contractor may revise the Program and submit it to the Project Manager again at any time. A revised Program shall show the effect of Variations and Compensation Events.

27. Extension of the Intended Completion Date

27.1 The Project Manager shall extend the Intended Completion Date if a Compensation Event occurs or a Variation is issued which makes it impossible for Completion to be achieved by the Intended Completion Date without the Contractor taking steps to accelerate the remaining work, which would cause the Contractor to incur additional cost.

27.2 The Project Manager shall decide whether and by how much to extend the Intended Completion Date within 21 days of the Contractor asking the Project Manager for a decision upon the effect of a Compensation Event or Variation and submitting full supporting information. If the Contractor has failed to give early warning of a delay or has failed to cooperate in dealing with a delay, the delay by this failure shall not be

considered in assessing the new Intended Completion Date.

28. Acceleration

28.1 When the Procuring Entity wants the Contractor to finish before the Intended Completion Date, the Project Manager shall obtain priced proposals for achieving the necessary acceleration from the Contractor. If the Procuring Entity accepts these proposals, the Intended Completion Date shall be adjusted accordingly and confirmed by both the Procuring Entity and the Contractor.

28.2 If the Contractor's priced proposals for an acceleration are accepted by the Procuring Entity, they are incorporated in the Contract Price and treated as a Variation.

29. Delays Ordered by the Project Manager

29.1 The Project Manager may instruct the Contractor to delay the start or progress of any activity within the Works.

30. Management Meetings

30.1 Either the Project Manager or the Contractor may require the other to attend a management meeting. The business of a management meeting shall be to review the plans for remaining work and to deal with matters raised in accordance with the early warning procedure.

30.2 The Project Manager shall record the business of management meetings and provide copies of the record to those attending the meeting and to the Procuring Entity. The responsibility of the parties for actions to be taken shall be decided by the Project Manager either at the management meeting or after the management meeting and stated in writing to all who attended the meeting.

31. Early Warning

31.1 The Contractor shall warn the Project Manager at the earliest opportunity of specific likely future events or circumstances that may adversely affect the quality of the work, increase the Contract Price, or delay the execution of the Works. The Project Manager may require the Contractor to provide an estimate of the expected effect of the future event or circumstance on the Contract Price and Completion Date. The estimate shall be provided by the Contractor as soon as reasonably possible.

31.2 The Contractor shall cooperate with the Project Manager in making and considering proposals for how the effect of such an event or circumstance can be avoided or reduced by anyone involved in the work and in carrying out any resulting instruction of the Project Manager.

C. Quality Control

32. Identifying Defects

32.1 The Project Manager shall check the Contractor's work and notify the Contractor of any Defects that are found. Such checking shall not affect the Contractor's responsibilities. The Project Manager may instruct the Contractor to search for a Defect and to uncover and test any work that the Project Manager considers may have a Defect.

33. Tests

33.1 If the Project Manager instructs the Contractor to carry out a test not specified in the Specification to check whether any work has a Defect and the test shows that it does, the Contractor shall pay for the test and any samples. If there is no Defect, the test shall be a Compensation Event.

34. Correction of Defects

34.1 The Project Manager shall give notice to the Contractor of any Defects before the end of the Defects Liability Period, which begins at Completion, and is defined in the SCC. The Defects Liability Period shall be extended for as long as Defects remain to be corrected.

34.2 Every time notice of a Defect is given, the Contractor shall correct the notified Defect within the length of time specified by the Project Manager's notice.

35. Uncorrected Defects

35.1 If the Contractor has not corrected a Defect within the time specified in the Project Manager's notice, the Project Manager shall assess the cost of having the Defect corrected, and the Contractor shall pay this amount.

D. Cost Control

36. Contract Price[7]

36.1 The Bill of Quantities shall contain priced items for the Works to be performed by the Contractor. The Bill of Quantities is used to calculate the Contract Price. The Contractor will be paid for the quantity of the work accomplished at the rate in the Bill of Quantities for each item.

37. Changes in the Contract Price[8]

37.1 If the final quantity of the work done differs from the quantity in the Bill of Quantities for the particular item by more than 25 percent, provided the change exceeds 1 percent of the Initial Contract Price, the Project Manager shall adjust the rate to allow for the change. The Project Manager shall not adjust rates from changes in quantities if thereby the Initial Contract Price is exceeded by more than 15 percent, except with the prior approval of the Procuring Entity.

37.2 If requested by the Project Manager, the Contractor shall provide the Project Manager with a detailed cost breakdown of any rate in the Bill of Quantities.

38. Variations

38.1 All Variations shall be included in updated Programs9 produced by the Contractor.

38.2 The Contractor shall provide the Project Manager with a quotation for carrying out the Variation when requested to do so by the Project Manager. The Project Manager shall assess the quotation, which shall be given within seven (7) days of the request or within any longer period stated by the Project Manager and before the Variation is ordered.

38.3 If the Contractor's quotation is unreasonable, the Project Manager may order the Variation and make a change to the Contract Price, which shall be based on the Project Manager's own forecast of the effects of the Variation on the Contractor's costs.

38.4 If the Project Manager decides that the urgency of varying the work would prevent a quotation being given and considered without delaying the work, no quotation shall be given and the Variation shall be treated as a Compensation Event.

---

[7] *In lump sum contracts, replace GCC Sub-Clauses 36.1 as follows:*

36.1 The Contractor shall provide updated Activity Schedules within 14 days of being instructed to by the Project Manager. The Activity Schedule shall contain the priced activities for the Works to be performed by the Contractor. The Activity Schedule is used to monitor and control the performance of activities on which basis the Contractor will bepaid. If payment for materials on site shall be made separately, the Contractor shall show delivery of Materials to the Site separately on the Activity Schedule.

[8] *In lump sum contracts, replace entire GCC Clause 37 with new GCC Sub-Clause 37.1, as follows:*
The Activity Schedule shall be amended by the Contractor to accommodate changes of Program or method of working made at the Contractor's own discretion. Prices in the Activity Schedule shall notbealtered when the Contractor makes such changes to the Activity Schedule.

[9] *In lump sum contracts, add "and Activity Schedules" after "Programs."* [10] *In lump sum contracts, delete this paragraph.*

38.5 The Contractor shall not be entitled to additional payment for costs that could have been avoided by giving early warning

38.6 If the work in the Variation corresponds to an item description in the Bill of Quantities and if, in the opinion of the Project Manager, the quantity of work above the limit stated in Sub-Clause 39.1 or the timing of its execution do not cause the cost per unit of quantity to change, the rate in the Bill of Quantities shall be used to calculate the value of the Variation. If the cost per unit of quantity changes, or if the nature or timing of the work in the Variation does not correspond with items in the Bill of Quantities, the quotation by the Contractor shall be in the form of new rates for the relevant items of work

38.7 Value Engineering: The Contractor may prepare, at its own cost, a value engineering proposal at any time during the performance of the contract. The value engineering proposal shall, at a minimum, include the following;

a) the proposed change(s), and a description of the difference to the existing contract requirements;
b) a full cost/benefit analysis of the proposed change(s) including a description and estimate of costs (including life cycle costs) the Procuring Entity may incur in implementing the value engineering proposal; and
c) A description of any effect(s) of the change on performance/functionality.

38.8 The Procuring Entity may accept the value engineering proposal if the proposal demonstrates benefits that:

a) accelerate the contract completion period; or
b) reduce the Contract Price or the life cycle costs to the Procuring Entity; or
c) improve the quality, efficiency, safety or sustainability of the Facilities; or
d) Yield any other benefits to the Procuring Entity, without compromising the functionality of the Works.

38.9 If the value engineering proposal is approved by the Procuring Entity and results in:

a) a reduction of the Contract Price; the amount to be paid to the Contractor shall be the **percentage specified in the SCC** of the reduction in the Contract Price; or
b) an increase in the Contract Price; but results in a reduction in life cycle costs due to any benefit described in (a) to (d) above, the amount to be paid to the Contractor shall be the full increase in the Contract Price.

39. Cash Flow Forecasts

39.1 When the Program[11], is updated, the Contractor shall provide the Project Manager with an updated cash flow forecast. The cash flow forecast shall include different currencies, as defined in the Contract, converted as necessary using the Contract exchange rates.

40. Payment Certificates

40.1 The Contractor shall submit to the Project Manager monthly statements of the estimated value of the work executed less the cumulative amount certified previously.

40.2 The Project Manager shall check the Contractor's monthly statement and certify the amount to be paid to the Contractor.

40.3 The value of work executed shall be determined by the Project Manager.

40.4 The value of work executed shall comprise the value of the quantities of work in the Bill of Quantities that have been completed12.

40.5 The value of work executed shall include the valuation of Variations and Compensation Events.

40.6 The Project Manager may exclude any item certified in a previous certificate or reduce the proportion of any item previously certified in any certificate in the light of later information.

40.7 Where the contract price is different from the corrected tender price, in order to ensure the contractor is not paid less or more relative to the contract price (which would be the tender price), payment valuation certificates and variation orders on omissions and additions valued based on rates in the Bill of Quantities or schedule of rates in the Tender, will be adjusted by a plus or minus percentage. The percentage already worked out during tender evaluation is worked out as follows: *(corrected tender price – tender price)/tender price X 100.*

41. Payments

41.1 Payments shall be adjusted for deductions for advance payments and retention. The Procuring Entity shall pay the Contractor the amounts certified by the Project Manager within 30 days of the date of each certificate. If the Procuring Entity makes a late payment, the Contractor shall be paid interest on the late payment in the next payment. Interest shall be calculated from the date by which the payment should have been made up to the date when the late payment is made at the prevailing rate of interest for commercial borrowing for each of the currencies in which payments are made.

41.2 If an amount certified is increased in a later certificate or as a result of an award by the Adjudicator or an Arbitrator, the Contractor shall be paid interest upon the delayed payment as set out in this clause. Interest shall be calculated from the date upon which the increased amount would have been certified in the absence of dispute.

41.3 Unless otherwise stated, all payments and deductions shall be paid or charged in the proportions of currencies comprising the Contract Price.

41.4 Items of the Works for which no rate or price has been entered in shall not be paid for by the Procuring Entity and shall be deemed covered by other rates and prices in the Contract.

42. Compensation Events

42.1 The following shall be Compensation Events:

d) The Procuring Entity does not give access to a part of the Site by the Site Possession Date pursuant to GCC Sub-Clause 20.1.

e) The Procuring Entity modifies the Schedule of Other Contractors in a way that affects the work of the Contractor under the Contract.

f) The Project Manager orders a delay or does not issue Drawings, Specifications, or instructions required for execution of the Works on time.

g) The Project Manager instructs the Contractor to uncover or to carry out additional tests upon work, which is then found to have no Defects.

h) The Project Manager unreasonably does not approve a subcontract to be let.

i) Ground conditions are substantially more adverse than could reasonably have been assumed before issuance of the Letter of Acceptance from the information issued to bidders (including the Site Investigation Reports), from information available publicly and from a visual inspection of the Site.

j) The Project Manager gives an instruction for dealing with an unforeseen condition, caused by the Procuring Entity, or additional work required for safety or other reasons.

k) Other contractors, public authorities, utilities, or the Procuring Entity does not work within the dates and other constraints stated in the Contract, and they cause delay or extra cost to the Contractor.

l) The advance payment is delayed.

m) The effects on the Contractor of any of the Procuring Entity's Risks.

n) The Project Manager unreasonably delays issuing a Certificate of Completion.

42.2 If a Compensation Event would cause additional cost or would prevent the work being completed before the Intended Completion Date, the Contract Price shall be increased and/or the Intended Completion Date shall be extended. The Project Manager shall decide whether and by how much the Contract Price shall be increased and whether and by how much the Intended Completion Date shall be extended.

42.3 As soon as information demonstrating the effect of each Compensation Event upon the Contractor's forecast cost has been provided by the Contractor, it shall be assessed by the Project Manager, and the Contract Price shall be adjusted accordingly. If the Contractor's forecast is deemed unreasonable, the Project Manager shall adjust the Contract Price based on the Project Manager's own forecast. The Project Manager shall assume that the Contractor shall react competently and promptly to the event.

[11] *In lump sum contracts, add "or Activity Schedule" after "Program."*

[12] *In lump sum contracts, replace this paragraph with the following: "The value of work executed shall comprise the value of completed activities in the Activity Schedule."*

42.4 The Contractor shall not be entitled to compensation to the extent that the Procuring Entity's interests are adversely affected by the Contractor's not having given early warning or not having cooperated with the Project Manager.

43. Tax

43.1 The Project Manager shall adjust the Contract Price if taxes, duties, and other levies are changed between the date 30 days before the submission of bids for the Contract and the date of the last Completion certificate. The adjustment shall be the change in the amount of tax payable by the Contractor, provided such changes are not already reflected in the Contract Price or are a result of GCC Clause 44.

44. Currency y of Payment

44.1 All payments under the contract shall be made in Kenya Shillings

45. Price Adjustment

45.1 Prices shall be adjusted for fluctuations in the cost of inputs only if **provided for in the SCC.** If so provided, the amounts certified in each payment certificate, before deducting for Advance Payment, shall be adjusted by applying the respective price adjustment factor to the payment amounts due in each currency. A separate formula of the type specified below applies:

P = A + B Im/Io

Where: **P** is the adjustment factor for the portion of the Contract Price payable.

A and **B** are coefficients[13] **specified in the SCC,** representing the non-adjustable and adjustable portions, respectively, of the Contract Price payable and Im is the index prevailing at the end of the month being invoiced and IOC is the index prevailing 30 days before Bid opening for inputs payable.

45.2 If the value of the index is changed after it has been used in a calculation, the calculation shall be corrected and an adjustment made in the next payment certificate. The index value shall be deemed to take account of all changes in cost due to fluctuations in costs.

46. Retention

46.1 The Procuring Entity shall retain from each payment due to the Contractor the proportion stated in the **SCC** until Completion of the whole of the Works.

46.2 Upon the issue of a Certificate of Completion of the Works by the Project Manager, in accordance with GCC 53.1, half the total amount retained shall be repaid to the Contractor and half when the Defects Liability Period has passed and the Project Manager has certified that all Defects notified by the Project Manager to the Contractor before the end of this period have been corrected. The Contractor may substitute retention money with an "on demand" Bank guarantee.

47. Liquidated Damages

47.1 The Contractor shall pay liquidated damages to the Procuring Entity at the rate per day stated in the **SCC** for each day that the Completion Date is later than the Intended Completion Date. The total amount of liquidated damages shall not exceed the amount defined in the SCC. The Procuring Entity may deduct liquidated damages from payments due to the Contractor. Payment of liquidated damages shall not affect the Contractor's liabilities.

47.2 If the Intended Completion Date is extended after liquidated damages have been paid, the Project Manager shall correct any overpayment of liquidated damages by the Contractor by adjusting the next payment certificate. The Contractor shall be paid interest on the overpayment, calculated from the date of payment to the date of repayment, at the rates specified in GCC Sub-Clause 41.1.

48. Bonus

48.1 The Contractor shall be paid a Bonus calculated at the rate per calendar day **stated in the SCC** for each day (less any days for which the Contractor is paid for acceleration) that the Completion is earlier than the Intended Completion Date. The Project Manager shall certify that the Works are complete, although they may not be due to be complete.

49. Advance Payment

49.1 The Procuring Entity shall make advance payment to the Contractor of the amounts stated in the **SCC** by the date stated in the **SCC**, against provision by the Contractor of an Unconditional Bank Guarantee in a form and by a bank acceptable to the Procuring Entity in amounts and currencies equal to the advance payment. The Guarantee shall remain effective until the advance payment has been repaid, but the amount of the Guarantee shall be progressively reduced by the amounts repaid by the Contractor. Interest shall not be charged on the advance payment.

49.2 The Contractor is to use the advance payment only to pay for Equipment, Plant, Materials, and mobilization expenses required specifically for execution of the Contract. The Contractor shall demonstrate that advance payment has been used in this way by supplying copies of invoices or other documents to the Project Manager.

49.3 The advance payment shall be repaid by deducting proportionate amounts from payments otherwise due to the Contractor, following the schedule of completed percentages of the Works on a payment basis. No account shall be taken of the advance payment or its repayment in assessing valuations of work done, Variations, price aadjustments, Compensation Events, Bonuses, or Liquidated Damages.

50. Securities

50.1 The Performance Security shall be provided to the Procuring Entity no later than the date specified in the Letter of Acceptance and shall be issued in an amount **specified in the SCC,** by a bank or surety acceptable to the Procuring Entity and denominated in the types and proportions of the currencies in which the Contract Price is payable. The Performance Security shall be valid until a date 28 day from the date of issue of the Certificate of Completion in the case of a Bank Guarantee, and until one year from the date of issue of the Completion Certificate in the case of a Performance Bond.

51. Day works

51.1 If applicable, the Day works rates in the Contractor's Bid shall be used only when the Project Manager has given written instructions in advance for additional work to be paid for in that way.

51.2 All work to be paid for as Day works shall be recorded by the Contractor on forms approved by the Project Manager. Each completed form shall be verified and signed by the Project Manager within two days of the work being done.

51.3 The Contractor shall be paid for Day works subject to obtaining signed Day works forms.

52. Cost of Repairs

52.1 Loss or damage to the Works or Materials to be incorporated in the Works between the Start Date and the end of the Defects Correction periods shall be remedied by the Contractor at the Contractor's cost if the loss or damage arises from the Contractor's acts or omissions.

E. Finishing the Contract

53. Completion

53.1 The Contractor shall request the Project Manager to issue a Certificate of Completion of the Works, and the Project Manager shall do so upon deciding that the whole of the Works is completed.

54. Taking Over

54.1 The Procuring Entity shall take over the Site and the Works within seven days of the Project Manager's issuing a certificate of Completion.

55. Final Account

55.1 The Contractor shall supply the Project Manager with a detailed account of the total amount that the Contractor considers payable under the Contract before the end of the Defects Liability Period. The Project Manager shall issue a Defects Liability Certificate and certify any final payment that is due to the Contractor within 56 days of receiving the Contractor's account if it is correct and complete. If it is not, the Project Manager shall issue within 56 days a schedule that states the scope of the corrections or additions that are necessary. If the Final Account is still unsatisfactory after it has been resubmitted, the Project Manager shall decide on the amount payable to the Contractor and issue a payment certificate.

[13] *The sum of the two coefficients A and B should be 1 (one) in the formula for each currency. Normally, both coefficients shall be the same in the formulae for all currencies, since coefficient A, for the non-adjustable portion of the payments, is a very approximate figure (usually 0.15) to take account of fixed cost elements or other non-adjustable components. The sum of the adjustments for each currency are added to the Contract Price.*

56. Operating and Maintenance Manuals

56.1 If "as built" Drawings and/or operating and maintenance manuals are required, the Contractor shall supply them by the dates stated in the SCC.

53.2 If the Contractor does not supply the Drawings and/or manuals by the dates stated in the SCC pursuant to GCC Sub-Clause 56.1, or they do not receive the Project Manager's approval, the Project Manager shall withhold the amount **stated in the SCC** from payments due to the Contractor.

57. Termination

57.1 The Procuring Entity or the Contractor may terminate the Contract if the other party causes a fundamental breach of the Contract.

57.2 Fundamental breaches of Contract shall include, but shall not be limited to, the following:

a) the Contractor stops work for 30 days when no stoppage of work is shown on the current Program and the stoppage has not been authorized by the Project Manager;

b) the Project Manager instructs the Contractor to delay the progress of the Works, and the instruction is not withdrawn within 30 days;

c) the Procuring Entity or the Contractor is made bankrupt or goes into liquidation other than for a reconstruction or amalgamation;

d) a payment certified by the Project Manager is not paid by the Procuring Entity to the Contractor within 84 days of the date of the Project Manager's certificate;

e) the Project Manager gives Notice that failure to correct a particular Defect is a fundamental breach of Contract and the Contractor fails to correct it within a reasonable period of time determined by the Project Manager;

f) the Contractor does not maintain a Security, which is required;

g) the Contractor has delayed the completion of the Works by the number of days for which the maximum amount of liquidated damages can be paid, as **defined in the SCC**; or

h) if the Contractor, in the judgment of the Procuring Entity has engaged in Fraud and Corruption, as defined in paragraph 2.2 a of the Appendix A to the GCC, in competing for or in executing the Contract, then the Procuring Entity may, after giving fourteen (14) days written notice to the Contractor, terminate the Contract and expel him from the Site.

57.3 Notwithstanding the above, the Procuring Entity may terminate the Contract for convenience.

57.4 If the Contract is terminated, the Contractor shall stop work immediately, make the Site safe and secure, and leave the Site as soon as reasonably possible.

57.5 When either party to the Contract gives notice of a breach of Contract to the Project Manager for a cause other than those listed under GCC Sub-Clause 56.2 above, the Project Manager shall decide whether the breach is fundamental or not.

58. Payment upon Termination

58.1 If the Contract is terminated because of a fundamental breach of Contract by the Contractor, the Project Manager shall issue a certificate for the value of the work done and Materials ordered less advance

payments received up to the date of the issue of the certificate and less the percentage to apply to the value of the work not completed, as specified in the SCC. Additional Liquidated Damages shall not apply. If the total amount due to the Procuring Entity exceeds any payment due to the Contractor, the difference shall be a debt payable to the Procuring Entity.

58.2 If the Contract is terminated for the Procuring Entity's convenience or because of a fundamental breach of Contract by the Procuring Entity, the Project Manager shall issue a certificate for the value of the work done, Materials ordered, the reasonable cost of removal of Equipment, repatriation of the Contractor's personnel employed solely on the Works, and the Contractor's costs of protecting and securing the Works, and less advance payments received up to the date of the certificate.

59. Property

59.1 All Materials on the Site, Plant, Equipment, Temporary Works, and Works shall be deemed to be the property of the Procuring Entity if the Contract is terminated because of the Contractor's default.

60. Release from Performance

60.1 If the Contract is frustrated by the outbreak of war or by any other event entirely outside the control of either the Procuring Entity or the Contractor, the Project Manager shall certify that the Contract has been frustrated. The Contractor shall make the Site safe and stop work as quickly as possible after receiving this certificate and shall be paid for all work carried out before receiving it and for any work carried out afterwards to which a commitment was made.

SECTION IX - SPECIAL CONDITIONS OF CONTRACT

The following Special Conditions[§] shall supplement the GCC. Whenever there is a conflict, the provisions Here in shall prevail over those in the GCC.

Number of GC Clause	Amendments of, and Supplements to, Clauses in the General Conditions of Contract
	A. General
GCC 1.1 (q)	The Procuring Entity is: Garissa County Government
GCC 1.1 (u)	The Intended Completion Date for the whole of the Works shall be Six month [*6*] from the date of the contract signed *Calendar months after commencement date issued.*
GCC 1.1 (x)	The Project Manager is; Director technical water services
GCC 1.1 (z)	The Site is located at *Garissa town* and is defined in drawings No. ***N/A***
GCC 1.1 (cc)	The Start Date shall be; Fourteen [14] days after contract signing
GCC 1.1 (gg)	**PROPOSED BURBURIS WATER CONNECTIONS AT GALBERT WARD IN GARISSA COUNTY** The Scope Works Consist of; i.) Bill No.2- Road & Site Clearance ii.) Bill No.3- Drilling 10" BOREHOLE iii.) Bill No. 4-Equipping 3No. B-Hs iv.) Bill No.5- Flood Proofing v.) Bill No.6- Control Rm & Power House vi.) Bill No.7 -Raising Main 8" vii.) Bill No.8 -Elevated Tank viii.)Bill No.9 -Last Mile connectivity ix.) Bill No.10 -Washroom x.) Bill No.11- Borehole Site Fencing xi.) Bill No.12 -Raising Main 4"-HDPE PN 12.5 to Modika Tank xii.) Bill No.12- Upgrading Transformer
GCC 2.2	Sectional Completions are: ***Not allowed***
GCC 5.1	The Project manager may delegate any of his duties and responsibilities.
GCC 8.1	Schedule of other contractors: *[insert Schedule of Other Contractors, if appropriate]*
GCC 9.1	**Key Personnel** GCC 9.1 is replaced with the following: 9.1 Key Personnel are the Contractor's personnel named in this GCC 9.1 of the Special Conditions of Contract. The Contractor shall employ the Key Personnel and use the equipment identified in its Bid, to carry out the Works or other personnel and equipment approved by the Project Manager. The Project Manager shall approve any proposed replacement of Key Personnel and equipment only if their relevant qualifications or characteristics are substantially equal to or better than those proposed in the Bid. [Insert the name/s of each Key Personnel agreed by the Procuring Entity prior to Contract signature.]

GCC 13.1	The minimum insurance amounts and deductibles shall be: (a) For loss or damage to the Works, Plant, Materials and Contractor's Equipment: • Minimum Insurance Amount shall be the Contract Sum (inclusive of Duties and Taxes) plus the value of the Contractor's Plant & Equipment plus Kshs. 50,000.00 for clearance of debris • Maximum Deductible shall be 10% of Each Loss

§ *Except where otherwise specified, all* Special *Conditions of Contract should be filled in by the Procuring Entity prior to issuance of the bidding document. Schedules and reports to be provided by the Procuring Entity should be annexed.*

Number of GC Clause	Amendments of, and Supplements to, Clauses in the General Conditions of Contract
	(b) For Personal Injury or Death of the Contractor's Employees: • Minimum Insurance Amount shall be Kshs 2,000,000 per occurrence, number of occurrences unlimited. • Maximum Deductible Kshs.25, 000.00 (c) For damage to Third Party Property: • Kshs. 1,000,000.00 per occurrence with number of occurrences unlimited. Maximum Deductible Kshs. 50,000.00 (d) For Personal Injury or Death of Third Parties: (i) 2per occurrence with number of occurrences unlimited.
GCC 14.1	Site Data are: *Not attached, the bidder shall rely on physical site inspections and investigations by bidder.*
GCC 20.1	The Site Possession Date(s) shall be: **The Start Date or as otherwise communicated by the Project Manager.**
GCC 23.1 & GCC 23.2	Appointing Authority for the Adjudicator: ***A nominee by the Chartered Institute of Arbitrators, Kenya branch***
	Hourly rate and types of reimbursable expenses to be paid to the Adjudicator: *The hourly fee for Adjudicator shall be capped at: KES 25,000/= The reimbursable expenses shall include expenses on transport and communication.*
B. Time Control	
GCC 26.1	The Contractor shall submit for approval a Program for the Works within Seven [7] days from the date of the Letter of Acceptance.
GCC 26.3	The period between Program updates is *five [5] working* days. The amount to be withheld for late submission of an updated Program is *KES 5,000/=*
C. Quality Control	
GCC 34.1	The Defects Liability Period is: *three (3) Months*.
D. Cost Control	
GCC 38.9	If the value engineering proposal is approved by the Procuring Entity the amount to be paid to the Contractor shall be 15% of the reduction in the Contract Price.
GCC 44.1	The currency of the Procuring Entity's Country is: ***KENYA SHILLINGS [KES]***.
GCC 45.1	The Contract ***is not*** subject to price adjustment in accordance with GCC Clause 45, and the following information regarding coefficients ***does not*** apply.
GCC 46.1	The proportion of payments retained is: **10% of the value of certificate of payment.**
GCC 47.1	The liquidated damages for the whole of the Works are ***0. 5%*** *of the final Contract Price* per day. The maximum amount of liquidated damages for the whole of the Works is ***10%*** of the final Contract Price.
GCC 48.1	The Bonus for the whole of the Works is ***N/A*** per day. The maximum amount of Bonus for the whole of the Works is ***N/A*** of the final Contract Price.
GCC 49.1	The Advance Payments shall be; ***N/A***
GCC 50.1	The Performance Security amount is 10% of contract sum Percent of the Accepted Contract Amount and in the same currency (ies) of the Accepted Contract Amount.

E. Finishing the Contract	
GCC 56.1	The date by which operating, and maintenance manuals are required is ***Fourteen [14] days after substantial completion.***

Number of GC Clause	**Amendments of, and Supplements to, Clauses in the General Conditions of Contract**
	The date by which "as built" drawings are required is ***four weeks after works completion***.
GCC 56.2	The amount to be withheld for failing to produce "as built" drawings and/or operating and maintenance manuals by the date required in GCC 58.1 is *KES. 5,000.00 per day*
GCC 57.2 (g)	The maximum number of days is: *10Days; consistent with Clause 47.1 on liquidated damages.*
GCC 58.1	The percentage to apply to the value of the work not completed, representing the Procuring Entity's additional cost for completing the Works, is *10%*

SECTION X - CONTRACT FORMS

FORM No. 1 - NOTIFICATION OF INTENTION TO AWARD

FORM No. 2 - REQUEST FOR REVIEW

FORM No. 3 - LETTER OF AWARD

FORM No. 4 – CONTRACT AGREEMENT

FORM No. 5 – PERFORMANCE SECURITY [Option 1 - Unconditional Demand Bank Guarantee]

FORM No. 6 - PERFORMANCE SECURITY [Option 2– Performance Bond]

FORM No. 7 - ADVANCE PAYMENT SECURITY

FORM No. 8 - RETENTION MONEY SECURITY

FORM No. 9 - BENEFICIAL OWNERSHIP DISCLOSURE FORM

FORM No 1: NOTIFICATION OF INTENTION TO AWARD

This Notification of Intention to Award shall be sent to each Tenderer that submitted a Tender. Send this Notification to the Tenderer's Authorized Representative named in the Tender Information Form on the format below.

FORMAT

1. For the attention of Tenderer's Authorized Representative
   - *i)* Name: *[insert Authorized Representative's name]*
   - *ii)* Address: *[insert Authorized Representative's Address]*
   - *iii)* Telephone: *[insert Authorized Representative's telephone/fax numbers]*
   - *iv)* Email Address: *[insert Authorized Representative's email address]*

   [IMPORTANT: insert the date that this Notification is transmitted to Tenderers. The Notification must be sent to all Tenderers simultaneously. This means on the same date and as close to the same time as possible.]

2. Date of transmission: [*email*] on [*date*] (local time)

   This Notification is sent by (*Name and designation*) _____

3. Notification of Intention to Award

   - *i)* Procuring Entity: *[insert the name of the Procuring Entity]*
   - *ii)* Project: *[insert name of project]*
   - *iii)* Contract title: *[insert the name of the contract]*
   - *iv)* Country: *[insert country where ITT is issued]*
   - *v)* ITT No: *[insert ITT reference number from Procurement Plan]*

   This Notification of Intention to Award (Notification) notifies you of our decision to award the above contract. The transmission of this Notification begins the Standstill Period. During the Standstill Period, you may:

4. Request a debriefing in relation to the evaluation of your tender

   Submit a Procurement-related Complaint in relation to the decision to award the contract.

   a) The successful tenderer

      i) Name of successful Tender _____

      ii) Address of the successful Tender _____

      iii) Contract price of the successful Tender Kenya Shillings _____

      (in words _____)

   b) Other Tenderers

   Names of all Tenderers that submitted a Tender. If the Tender's price was evaluated include the evaluated price as well as the Tender price as read out. For Tenders not evaluated, give one main reason the Tender was unsuccessful.

SNo	Name of Tender	Tender Price as read out	Tender's evaluated price (Note a)	One Reason Why not Evaluated
1				
2				
3				
4				
5				

(Note a) State NE if not evaluated

5. How to request a debriefing

a) DEADLINE: The deadline to request a debriefing expires at midnight on [*insert date*] (*local time*).

b) You may request a debriefing in relation to the results of the evaluation of your Tender. If you decide to request a debriefing your written request must be made within three (5) Business Days of receipt of this Notification of Intention to Award.

c) Provide the contract name, reference number, name of the Tenderer, contact details; and address the request for debriefing as follows:

i) Attention: [*insert full name of person, if applicable*]

ii) Title/position: [*insert title/position*]

ii) Agency: [*insert name of Procuring Entity*]

iii) Email address: [*insert email address*]

d) If your request for a debriefing is received within the 3 Days deadline, we will provide the debriefing within five (3) Business Days of receipt of your request. If we are unable to provide the debriefing within this period, the Standstill Period shall be extended by five (3) Days after the date that the debriefing is provided. If this happens, we will notify you and confirm the date that the extended Standstill Period will end.

e) The debriefing may be in writing, by phone, video conference call or in person. We shall promptly advise you in writing how the debriefing will take place and confirm the date and time.

f) If the deadline to request a debriefing has expired, you may still request a debriefing. In this case, we will provide the debriefing as soon as practicable, as and normally no later than fifteen (15) Days from the date of publication of the Contract Award Notice.

6. How to make a complaint

a) Period: Procurement-related Complaint challenging the decision to award shall be submitted by midnight, [*insert date*] (local time).

b) Provide the contract name, reference number, name of the Tenderer, contact details; and address the Procurement-related Complaint as follows:

i) Attention: [*insert full name of person, if applicable*]

ii) Title/position: [*insert title/position*]

iii) Agency: [*insert name of Procuring Entity*]

iv) Email address: [*insert email address*]

c) At this point in the procurement process, you may submit a Procurement-related Complaint challenging the decision to award the contract. You do not need to have requested, or received, a debriefing before making this complaint. Your complaint must be submitted within the Standstill Period and received by us before the Standstill Period ends.

d) Further information: For more information refer to the Public Procurement and Disposals Act 2015 and its Regulations available from the Website info@ppra.go.ke or complaints@ppra.go.ke.

You should read these documents before preparing and submitting your complaint.

e) There are four essential requirements:

i) You must be an 'interested party'. In this case, that means a Tenderer who submitted a Tender in this tendering process, and is the recipient of a Notification of Intention toAward.

ii) The complaint can only challenge the decision to award the contract.

iii) Youmust submit the complaint within the period stated above.

iv) You must include, in your complaint, all of the information required to support your complaint.

7. Standstill Period

i) DEADLINE: The Standstill Period is due to end at midnight on [*insert date*] (local time).

ii) The Standstill Period lasts ten (14) Days after the date of transmission of this Notification of Intention to Award.

iii) The Standstill Period may be extended as stated in paragraph Section 5 (d) above.

If you have any questions regarding this Notification please do not hesitate to contact us. On behalf of the Procuring Entity:

Signature: _____ **Name:** _____

Title/position: _____ **Telephone:** ___ **Email:** _____

FORM No. 2 - REQUEST FOR REVIEW

FORM FOR REVIEW (r.203 (1))

PUBLIC PROCUREMENT ADMINISTRATIVE REVIEW BOARD

APPLICATION NO…….OF……..….20……...

BETWEEN

… ..... **APPLICANT**

AND

…...... **RESPONDENT (Procuring Entity)**

Request for review of the decision of the…… (Name of the Procuring Entity of ……dated the…day of …….20…….in the matter of Tender No……..…of ……..20….. for..... (Tender description).

REQUEST FOR REVIEW

I/We……,the above named Applicant(s), of address: Physical address……P. O. Box No.....Tel. No……..Email ....., hereby request the Public Procurement Administrative Review Board to review the whole/part of the above mentioned decision on the following grounds , namely:

1.

2.

By this memorandum, the Applicant requests the Board for an order/orders that:

1.

2.

SIGNED ……. (Applicant) Dated on…….day of ……/…20……

FOR OFFICIAL USE ONLY Lodged with the Secretary Public Procurement Administrative Review Board on.....day of ……....20….……

SIGNED

Board Secretary

FORM No 3: LETTER OF AWARD

[Letter head paper of the Procuring Entity] [Date]

To: *[name and address of the Contractor]*

This is to notify you that your Tender dated *[date]* for execution of the *[name of the Contract and identification number, as given in the Contract Data]* for the Accepted Contract Amount *[amount in numbers and words] [name of currency]*, as corrected and modified in accordance with the Instructions to Tenderers, is hereby accepted by .....(*Name of Procuring Entity)*.

You are requested to furnish the Performance Security within 30 days in accordance with the Conditions of Contract, using, for that purpose, one of the Performance Security Forms included in Section VIII, Contract Forms, of the Tender Document.

Authorized Signature:.....

Name and Title of Signatory:.....

Name of Procuring Entity.....

Attachment: *Contract Agreement*.....

FORM No 4: CONTRACT AGREEMENT

THIS AGREEMENT made the_____day of_____, 20____, between _____of _____(hereinafter "the Procuring Entity"), of the one part, and_____of_____(hereinafter "the Contractor"), of the other part:

WHEREAS the Procuring Entity desires that the Works known as_____should be executed by the Contractor, and has accepted a Tender by the Contractor for the execution and completion of these Works and the remedying of any defects therein,

The Procuring Entity and the Contractor agree as follows:

1. In this Agreement words and expressions shall have the same meanings as are respectively assigned to them in the Contract documents referred to.

2. The following documents shall be deemed to form and be read and construed as part of this Agreement. This Agreement shall prevail over all other Contract documents.
   a) the Letter of Acceptance
   b) the Letter of Tender
   c) the addenda Nos_____(if any)
   d) the Special Conditions of Contract
   e) the General Conditions of Contract;
   f) the Specifications
   g) the Drawings*;* and
   h) the completed Schedules and any other documents forming part of the contract.

3. In consideration of the payments to be made by the Procuring Entity to the Contractor as specified in this Agreement, the Contractor hereby covenants with the Procuring Entity to execute the Works and to remedy defects therein in conformity in all respects with the provisions of the Contract.

4. The Procuring Entity hereby covenants to pay the Contractor in consideration of the execution and completion of the Works and the remedying of defects therein, the Contract Price or such other sum as may become payable under the provisions of the Contract at the times and in the manner prescribed by the Contract.

IN WITNESS whereof the parties hereto have caused this Agreement to be executed in accordance with the Laws of Kenya on the day, month and year specified above.

Signed and sealed by_____(for the Procuring Entity)

Signed and sealed by_____(for the Contractor).

FORM No. 5 - PERFORMANCE SECURITY

[Option 1 - Unconditional Demand Bank Guarantee]

[Guarantor letterhead]

Beneficiary: _____ *[insert name and Address of* Procuring Entity*]* **Date:** ____

_____ *[Insert date of issue]*

Guarantor: [*Insert name and address of place of issue, unless indicated in the letterhead]*

1. We have been informed that _____ (hereinafter called "the Contractor") has entered into Contract No. _____ dated _____ with (*name of Procuring Entity*) _____ (the Procuring Entity as the Beneficiary), for the execution of _____ (Herein after called "the Contract").

2. Furthermore, we understand that, according to the conditions of the Contract, a performance guarantee is required.

3. At the request of the Contractor, we as Guarantor, hereby irrevocably undertake to pay the Beneficiary any sum or sums not exceeding in total an amount of _____ (*in words*),[1] such sum being payable in the types and proportions of currencies in which the Contract Price is payable, upon receipt by us of the Beneficiary's complying demand supported by the Beneficiary's statement, whether in the demand itself or in a separate signed document accompanying or identifying the demand, stating that the Applicant is in breach of its obligation(s) under the Contract, without the Beneficiary needing to prove or to show grounds for your demand or the sum specified therein.

4. This guarantee shall expire, no later than the …. Day of ……, 2..... [2], and any demand for payment under it must be received by us at the office indicated above on or before that date.

5. The Guarantor agrees to a one-time extension of this guarantee for a period not to exceed *[six months] [one year],* in response to the Beneficiary's written request for such extension, such request to be presented to the Guarantor before the expiry of the guarantee."

[Name of Authorized Official, signature(s) and seals/stamps].

Note: *All italicized text (including footnotes) is for use in preparing this form and shall be deleted from the final product.*

[1] *The Guarantor shall insert an amount representing the percentage of the Accepted Contract Amount specified in the Letter of Acceptance, less provisional sums, if any, and denominated either in the currency of the Contract or a freely convertible currency acceptable to the Beneficiary.*

[2] *Insert the date twenty-eight days after the expected completion date as described in GC Clause 11.9. The Procuring Entity should note that in the event of an extension of this date for completion of the Contract, the Procuring Entity would need to request an extension of this guarantee from the Guarantor. Such request must be in writing and must be made prior to the expiration date established in the guarantee.*

FORM No. 6 - PERFORMANCE SECURITY

[Option 2– Performance Bond]

[Note: Procuring Entities are advised to use Performance Security – Unconditional Demand Bank Guarantee instead of Performance Bond due to difficulties involved in calling Bondholder to action]
[Guarantor letterhead or SWIFT identifier code]

Beneficiary: _____ *[insert name and Address or* Procuring Entity*]* **Date:** _____ *[Insert date of issue]*.

PERFORMANCE BOND No.: _____

Guarantor: [*Insert name and address of place of issue, unless indicated in the letterhead]*

1. By this Bond _____ as Principal (hereinafter called "the Contractor") and _____] as Surety (hereinafter called "the Surety"), are held and firmly bound unto _____] as Obligee (hereinafter called "the Procuring Entity") in the amount of _____ for the payment of which sum well and truly to be made in the types and proportions of currencies in which the Contract Price is payable, the Contractor and the Surety bind themselves, their heirs, executors, administrators, successors and assigns, jointly and severally, firmly by these presents.

2. WHEREAS the Contractor has entered into a written Agreement with the Procuring Entity dated the _____ Day of _____, 20, for _____ in accordance with the documents, plans, specifications, and amendments thereto, which to the extent herein provided for, are by reference made part hereof and are hereinafter referred to as the Contract.

3. NOW, THEREFORE, the Condition of this Obligation is such that, if the Contractor shall promptly and faithfully perform the said Contract (including any amendments thereto), then this obligation shall be null and void; otherwise, it shall remain in full force and effect. Whenever the Contractor shall be, and declared by the Procuring Entity to be, in default under the Contract, the Procuring Entity having performed the Procuring Entity's obligations thereunder, the Surety may promptly remedy the default, or shall promptly:
   1) complete the Contract in accordance with its terms and conditions; or
   2) obtain a tender or tenders from qualified tenderers for submission to the Procuring Entity for completing the Contract in accordance with its terms and conditions, and upon determination by the Procuring Entity and the Surety of the lowest responsive Tenderers, arrange for a Contract between such Tenderer, and Procuring Entity and make available as work progresses (even though there should be a default or a succession of defaults under the Contract or Contracts of completion arranged under this paragraph) sufficient funds to pay the cost of completion less the Balance of the Contract Price; but not exceeding, including other costs and damages for which the Surety may be liable hereunder, the amount set forth in the first paragraph hereof. The term "Balance of the Contract Price," as used in this paragraph, shall mean the total amount payable by Procuring Entity to Contractor under the Contract, less the amount properly paid by Procuring Entity to Contractor; or
   3) pay the Procuring Entity the amount required by Procuring Entity to complete the Contract in accordance with its terms and conditions up to a total not exceeding the amount of this Bond.

4. The Surety shall not be liable for a greater sum than the specified penalty of this Bond.

5. Any suit under this Bond must be instituted before the expiration of one year from the date of the issuing of the Taking-Over Certificate. No right of action shall accrue on this Bond to or for the use of any person or corporation other than the Procuring Entity named herein or the heirs, executors, administrators, successors, and assigns of the Procuring Entity.

6. In testimony whereof, the Contractor has hereunto set his hand and affixed his seal, and the Surety has caused these presents to be sealed with his corporate seal duly attested by the signature of his legal representative, this day _____ of _____ 20_____.

SIGNED ON_____on behalf of _____

By_____in the capacity of In the presence of

SIGNED ON_____on behalf of By_____

in the capacity of In the presence of

FORM No. 7 - ADVANCE PAYMENT SECURITY

[Demand Bank Guarantee]

[Guarantor letterhead]

Beneficiary: _____*[Insert name and Address of* Procuring Entity*]*
Date: _____*[Insert date of issue]*

ADVANCE PAYMENTGUARANTEE No.: _____*[Insert guarantee reference number]* **Guarantor:**

_____**[***Insert name and address of place of issue, unless indicated in the letterhead]*

1. We have been informed that _____(hereinafter called "the Contractor") has entered into Contract No. _____*Dated* _____with the Beneficiary, for the execution of _____ (hereinafter called "the Contract").

2. Furthermore, we understand that, according to the conditions of the Contract, an advance payment in the sum _____(*In words*) is to be made against an advance payment guarantee.

3. At the request of the Contractor, we as Guarantor, hereby irrevocably undertake to pay the Beneficiary any sum or sums not exceeding in total an amount of _____(*in words*_____)[1] upon receipt by us of the Beneficiary's complying demand supported by the Beneficiary's statement, whether in the demand itself or in a separate signed document accompanying or identifying the demand, stating either that the Applicant:
   a) has used the advance payment for purposes other than the costs of mobilization in respect of the Works; or
   b) Has failed to repay the advance payment in accordance with the Contract conditions, specifying the amount which the Applicant has failed to repay.

4. A demand under this guarantee may be presented as from the presentation to the Guarantor of a certificate from the Beneficiary's bank stating that the advance payment referred to above has been credited to the Contractor on its account number _____at _____.

5. The maximum amount of this guarantee shall be progressively reduced by the amount of the advance payment repaid by the Contractor as specified in copies of interim statements or payment certificates which shall be presented to us. This guarantee shall expire, at the latest, upon our receipt of a copy of the interim payment certificate indicating that ninety (90) percent of the Accepted Contract Amount, less provisional sums, has been certified for payment, or on the ____ day of_____, 2 ,[2] whichever is earlier. Consequently, any demand for payment under this guarantee must be received by us at this office on or before that date.

6. The Guarantor agrees to a one-time extension of this guarantee for a period not to exceed *[six months][one year]*, in response to the Beneficiary's written request for such extension, such request to be presented to the Guarantor before the expiry of the guarantee.

[Name of Authorized Official, signature(s) and seals/stamps]

Note: All italicized text (including footnotes) is for use in preparing this form and shall be deleted from the final product.

[1]*The Guarantor shall insert an amount representing the amount of the advance payment and denominated either in the currency of the advance payment as specified in the Contract.*

[2]*Insert the expected expiration date of the Time for Completion. The Procuring Entity should note that in the event of an extension of the time for completion of the Contract, the Procuring Entity would need to request an extension of this guarantee from the Guarantor. Such request must be in writing and must be made prior to the expiration date established in the guarantee*

FORM No. 8 - RETENTION MONEY SECURITY

[Demand Bank Guarantee]

[Guarantor letterhead]

Beneficiary: _____*[Insert name and Address of* Procuring Entity*]*

Date:_____*[Insert date of issue]*

Advance payment guarantee no. *[Insert guarantee reference number]*

Guarantor: [*Insert name and address of place of issue, unless indicated in the letterhead]*

1. We have been informed that_____*[insert name of Contractor, which in the case of a joint venture shall be the name of the joint venture]* (hereinafter called "the Contractor") has entered into Contract No. _____*[Insert reference number of the contract]* dated_____with the Beneficiary, for the execution of_____*[insert name of contract and brief description of* Works*]* (hereinafter called "the Contract").

2. Furthermore, we understand that, according to the conditions of the Contract, the Beneficiary retains moneys up to thelimit set forthinthe Contract ("the Retention Money"), and that when the Taking-Over Certificate has been issued under the Contract and the first half of the Retention Money has been certified for payment, and payment of *[*insert the second half of the Retention Money] is to be made against a Retention Money guarantee.

3. At the request of the Contractor, we, as Guarantor, hereby irrevocably undertake to pay the Beneficiary any sum or sums not exceeding in total an amount of *[insert amount in figures]*_____(*[insert amount in words* _____*])*[1]

   upon receipt by us of the Beneficiary's complying demand supported by the Beneficiary's statement, whether in the demand itself or in a separate signed document accompanying or identifying the demand, stating that the Contractor is in breach of its obligation(s) under the Contract, without your needingtoproveorshow groundsfor your demand or the sum specified therein.

4. A demand under this guarantee may be presented as from the presentation to the Guarantor of a certificate from the Beneficiary's bank stating that the second half of the Retention Money as referred to above has been credited to the Contractor on its account number at_____*[insert name and address of Applicant's bank]*.

5. This guarantee shall expire no later than the …..... Day of …..... 2 .....[2], and any demand for payment under it must be received by us at the office indicated above on or before that date.

6. The Guarantor agrees to a one-time extension of this guarantee for a period not to exceed *[six months] [one year]*, in response to the Beneficiary's written request for such extension, such request to be presented to the Guarantor before the expiry of the guarantee.

[Name of Authorized Official, signature(s) and seals/stamps]

Note: All italicized text (including footnotes) is for use in preparing this form and shall be deleted from the final product

[1] *The Guarantor shall insert an amount representing the amount of the second half of the Retention Money.*

[2]*Insert a date that is twenty-eight days after the expiry of retention period after the actual completion date of the contract. The Procuring Entity should note that in the event of an extension of this date for completion of the Contract, the Procuring Entity would need to request an extension of this guarantee from the Guarantor. Such request must be in writing and must be made prior to the expiration date established in theguarantee.*

FORM No. 9 BENEFICIAL OWNERSHIP DISCLOSURE FORM

(Amended and issued pursuant to PPRA CIRCULAR No. 02/2022)

INSTRUCTIONS TO TENDERERS: DELETE THIS BOX ONCE YOU HAVE COMPLETED THE FORM

This Beneficial Ownership Disclosure Form ("Form") is to be completed by the successful tenderer pursuant to Regulation 13 (2A) and 13 (6) of the Companies (Beneficial Ownership Information) Regulations, 2020. In case of joint venture, the tenderer must submit a separate Form for each member. The beneficial ownership information to be submitted in this Form shall be current as of the date of its submission.

For the purposes of this Form, a Beneficial Owner of a Tenderer is any natural person who ultimately owns or controls the legal person (tenderer) or arrangements or a natural person on whose behalf a transaction is conducted and includes those persons who exercise ultimate effective control over a legal person (Tenderer) or arrangement.

Tender Reference No.:_____[*insert identification no*] Name of the Tender Title/Description:_____*[insert name of the assignment]* to:_____*[insert complete name of Procuring Entity]*

In response to the requirement in your notification of award dated_____*[insert date of notification of award]* to furnish additional information on beneficial ownership:_____*[select one option as applicable and delete the options that are not applicable]*

I) We here by provide the following beneficial ownership information.

Details of beneficial ownership

	Details of all Beneficial Owners		**% of shares a person holds in the company Directly or indirectly**	**% of voting rights a person holds in the company**	**Whether a person directly or indirectly holds a right to appoint or remove a member of the board of directors of the company or an equivalent governing body of the Tenderer** (Yes / No)	**Whether a person directly or indirectly exercises significant influence or control over the Company (tenderer) (Yes / No)**
1.	Full Name		Directly---------- % of shares Indirectly---------- % of shares	Directly…… ….% of voting rights Indirectly -------- % of voting rights	1. Having the right to appoint a majority of the board of the directors or an equivalent governing body of the Tenderer: Yes -----No---- 2. Is this right held directly or indirectly?: Direct……	1. Exercises significant influence or control over the Company body of the Company (tenderer**)** Yes -----No---- 2. Is this influence or control exercised directly or indirectly?
	National identity card number or Passport number					
	Personal Identification Number (where applicable)					
	Nationality					
	Date of birth *[dd/mm/yyyy]*					

	Details of all Beneficial Owners		**% of shares a person holds in the company Directly or indirectly**	**% of voting rights a person holds in the company**	**Whether a person directly or indirectly holds a right to appoint or remove a member of the board of directors of the company or an equivalent governing body of the Tenderer** (Yes / No)	**Whether a person directly or indirectly exercises significant influence or control over the Company (tenderer) (Yes / No)**
	Postal address				Indirect……...	Direct……..
	Residential address					
	Telephone number					Indirect……
	Email address					
	Occupation or profession					
2.	Full Name		Directly---------- % of shares Indirectly---------- % of shares	Directly…… ….% of voting rights Indirectly -------- % of voting rights	1. Having the right to appoint a majority of the board of the directors or an equivalent governing body of the Tenderer: Yes -----No---- 2. Is this right held directly or indirectly? Direct…… Indirect……...	1. Exercises significant influence or control over the Company body of the Company (tenderer) Yes -----No---- 2. Is this influence or control exercised directly or indirectly? Direct…….. Indirect……
	National identity card number or Passport number					
	Personal Identification Number (where applicable)					
	Nationality(ies)					
	Date of birth *[dd/mm/yyyy]*					
	Postal address					
	Residential address					
	Telephone number					
	Email address					
	Occupation or profession					
3.						
e.t.c						

II) Am fully aware that beneficial ownership information above shall be reported to the Public Procurement Regulatory Authority together with other details in relation to contract awards and shall be maintained in the Government Portal, published and made publicly available pursuant to Regulation 13(5) of the Companies (Beneficial Ownership Information) Regulations, 2020.(Notwithstanding this paragraph Personally Identifiable Information in line with the Data Protection Act shall not be published or made public). *Note that Personally Identifiable Information (PII) is defined as any information that can*

be used to distinguish one person from another and can be used to deanonymize previously anonymous data. This information includes National identity card number or Passport number, Personal Identification Number, Date of birth, Residential address, email address and Telephone number.

III) In determining who meets the threshold of who a beneficial owner is, the Tenderer must consider a natural person who in relation to the company:

(a) holds at least ten percent of the issued shares in the company either directly or indirectly;

(b) exercises at least ten percent of the voting rights in the company either directly or indirectly;

(c) holds a right, directly or indirectly, to appoint or remove a director of the company; or

(d) Exercises significant influence or control, directly or indirectly, over the company.

IV) What is stated to herein above is true to the best of my knowledge, information and belief.

*Name of the Tenderer ..... *[insert complete name of the Tenderer]*_____

*Name of the person duly authorized to sign the Tender on behalf of the Tenderer: ** [insert complete name of person duly authorized to sign the Tender]*

Designation of the person signing the Tender: ..... [Insert complete title of the person signing the Tender]

Signature of the person named above ..... [Insert signature of person whose name and capacity are shown above]

Date this..... [Insert date of signing] day of..... [Insert month], [insert year]

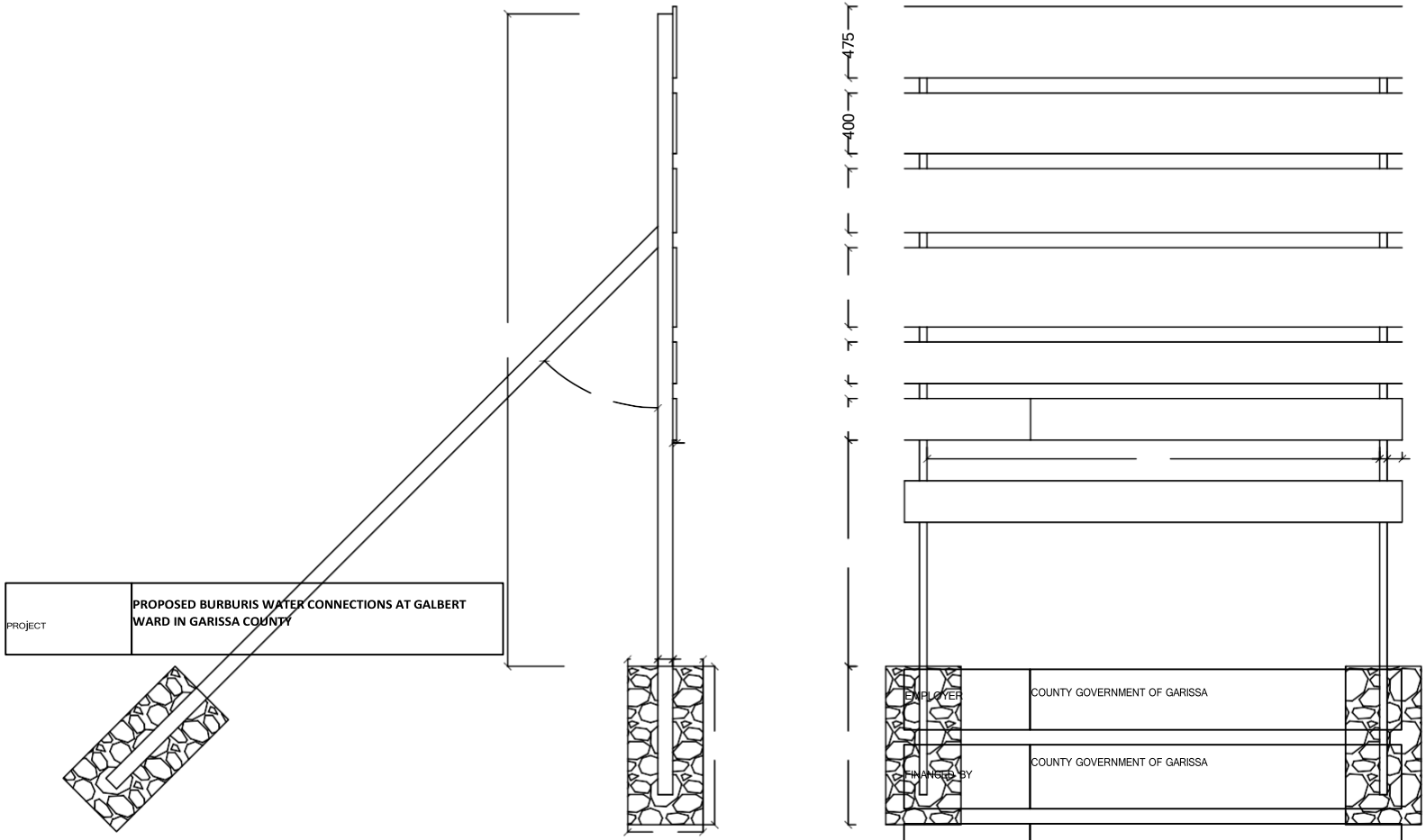
475
400
PROJECT
PROPOSED BURBURIS WATER CONNECTIONS AT GALBERT WARD IN GARISSA COUNTY
EMPLOYER
COUNTY GOVERNMENT OF GARISSA
FINANCED BY
COUNTY GOVERNMENT OF GARISSA
ENGINEER
COUNTY WATER DIRECTOR, GARISSA COUNTY
CONTRACTOR'S REPRESENTATIVE
GAWASCO TECHNICAL ENGINEER.

4325

45°

25

100

525

275

275

3000

50

NEMA PROJECT NUMBER:

NCA NUMBER:

1500

200 2100

1050

1050

500


Untitled Placemark
T Banks
T Banks
T Banks
Proposed B/H 1
Proposed B/H2
Proposed B/H 3
Control House
Last Borehole
ADC -Boreholes
Edge

Flexibility & Reliability

The clamp inserts are designed to cover a wide range of pipe sizes, significantly reducing the need for multiple insert combinations.

For example, a large span from 90mm to 315mm requires only three sets of inserts, greatly improving work efficiency.

Meanwhile, the inserts feature a high-strength structure, pressure-cast for durability, making them suitable for heavy-duty applications.



Available with

Model	FX160	FX200	FX250	FX315
Welding range (mm)	40-160	63-200	63-250	90-315
Standard reducers (mm)	40-50-63-75-90-110 -125-140-160(M)	63-75-90-110-125-140 -160-180-200(M)	63-75-90-110-125-140 -160-180-200-225-250(M)	90-110-125-140-160-180 -200-225-250-280-315(M)
Power supply	220V/50Hz, 1PH	220V/50Hz, 1PH	220V/50Hz, 1PH	220V/50Hz, 1PH
Total power	3.65 KW	3.95 KW	5.05 KW	5.85 KW
Heating plate Facer	1.5 KW	1.8 KW	2.3 KW	3.1 KW
	1.4 KW	1.4 KW	2.0 KW	2.0 KW
Hydraulic station	0.75 KW	0.75 KW	0.75 KW	0.75 KW
Pressure adjusting range	0-8 MPa	0-8 MPa	0-8 MPa	0-8MPa



Max Temperature	270ºC	270ºC	270ºC	270ºC
Temperature Deviation	±5ºC	±5ºC	±5ºC 11 CM^2	±5ºC
Piston Area	15.32 CM^2	15.32 CM^2		20.02 CM^2

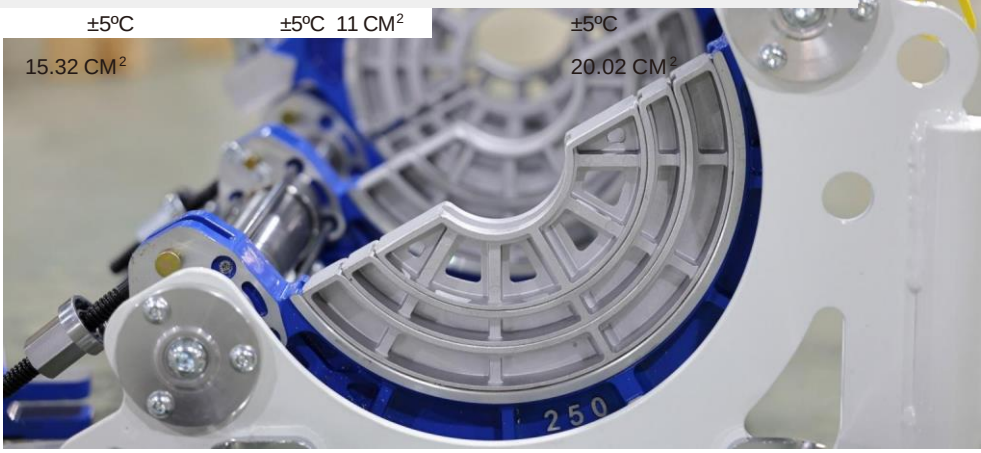

Flexibility & Reliability

The clamp inserts are designed to cover a wide range of pipe sizes, significantly reducing the need for multiple insert combinations.

For example, a large span from 90mm to 315mm requires only three sets of inserts, greatly improving work efficiency.

Meanwhile, the inserts feature a high-strength structure, pressure-cast for durability, making them suitable for heavy-duty applications.



Available with

Model	FX160	FX200	FX250	FX315
Welding range (mm)	40-160	63-200	63-250	90-315
Standard reducers (mm)	40-50-63-75-90-110 -125-140-160(M)	63-75-90-110-125-140 -160-180-200(M)	63-75-90-110-125-140 -160-180-200-225-250(M)	90-110-125-140-160-180 -200-225-250-280-315(M)
Power supply	220V/50Hz, 1PH	220V/50Hz, 1PH	220V/50Hz, 1PH	220V/50Hz, 1PH
Total power	3.65 KW	3.95 KW	5.05 KW	5.85 KW
Heating plate Facer	1.5 KW	1.8 KW	2.3 KW	3.1 KW
	1.4 KW	1.4 KW	2.0 KW	2.0 KW
Hydraulic station	0.75 KW	0.75 KW	0.75 KW	0.75 KW
Pressure adjusting range	0-8 MPa	0-8 MPa	0-8 MPa	0-8MPa

Max Temperature	270ºC	270ºC	270ºC	270ºC
Temperature Deviation	±5ºC	±5ºC	±5ºC 11 CM^2	±5ºC
Piston Area	15.32 CM^2	15.32 CM^2		20.02 CM^2

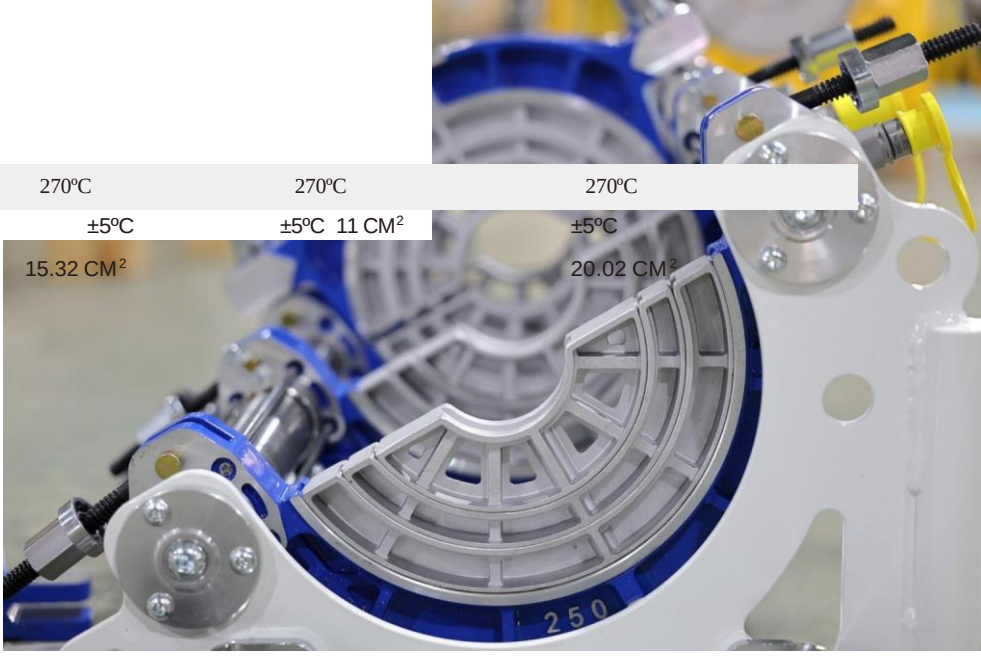

Welding range (mm)	90-355	180-400	180-450	180-450
Standard reducers (mm)	90-110-125-140-160-180-200	180-200-225-250-280	180-200-225-250-280	180-200-225-250-280
-225-250-280-315-355(M)		-315-355-400(M)	-315-355-400-450(M)	-315-355-400-450-500(M)
Power supply	220V/50Hz, 1PH	380V/50Hz, 3PH	380V/50Hz, 3PH	380V/50Hz, 3PH
Total power	6.35 KW	8.7 KW	8.7 KW	9.1 KW
Heating plate Facer	3.6 KW	6.5 KW	6.5 KW	6.5 KW
	2.0 KW	1.1 KW	1.1 KW	1.5 KW
Hydraulic station	0.75 KW	1.1 KW	1.1 KW	1.1 KW
Pressure adjusting range	0-8 MPa	0-10 MPa	0-10 MPa	0-10 MPa
Max Temperature	270ºC	270ºC	270ºC	270ºC
Temperature Deviation	±5ºC	±7ºC	±7ºC	±7ºC
Piston Area	20.02 CM^2	22.38 CM^2	22.38 CM^2	22.38 CM^2

Model	**FX630**	**FX800**	**FX1000**	**FX1200**
Welding range (mm)	315-630	500-800	630-1000	630-1200
Standard reducers (mm)	315-355-400-450-500	450-500-560-630	630-710-800	630-710-800-900
	-560-630(M)	-710-800(M)	-900-1000(M)	-1000-1100-1200(M)
Power supply	380V/50Hz, 1PH	380V/50Hz, 3PH	380V/50Hz, 3PH	380V/50Hz, 3PH
Total power	10.1 KW	1.5 KW	16.2 KW	2.2 KW
Heating plate Facer	7.5 KW		12.5 KW	
Hydraulic station	1.1 KW	1.5 KW	4 KW	4 KW



FOR PROFESSIONALS

Model	FX355	FX400	FX450	FX500

A Pro

Available with

Model	WP 160 Apro	WP 200 Apro	WP 250 Apro	WP 315 Apro
Welding range (mm)	40-160	63-200	63-250	90-315
Standard reducers (mm)	40-50-63-75-90-110 -125-140-160(M)	63-75-90-110-125-140 -160-180-200(M)	63-75-90-110-125-140 -160-180-200-225-250(M)	90-110-125-140-160-180 -200-225-250-280-315(M)
Power supply	220V/50Hz, 1PH	220V/50Hz, 1PH	220V/50Hz, 1PH	220V/50Hz, 1PH
Total power	3.65 KW	3.95 KW	5.05 KW	5.85 KW
Heating plate Facer	1.5 KW	1.8 KW	2.3 KW	3.1 KW
	1.4 KW	1.4 KW	2.0 KW	2.0 KW
Hydraulic station	0.75 KW	0.75 KW	0.75 KW	0.75 KW

Pressure adjusting range	0-8 MPa	0-8 MPa	0-8 MPa	0-8 MPa
Max Temperature	270ºC	270ºC	270ºC	270ºC
Temperature Deviation	±5ºC	±5ºC	±5ºC	±5ºC
Piston Area	15.32 CM^2	15.32 CM^2	11 CM^2	20.02 CM^2



A Pro



Model	WP 355 Apro	WP 400 Apro	WP 450 Apro	WP 500 Apro
Welding range (mm)	90-355	180-400	180-450	180-500
Standard reducers (mm)	90-110-125-140-160-180-200 -225-250-280-315-355(M)	180-200-225-250-280 -315-355-400(M)	180-200-225-250-280 -315-355-400-450(M)	180-200-225-250-280 -315-355-400-450-500(M)
Power supply	220V/50Hz, 1PH	380V/50Hz, 3PH	380V/50Hz, 3PH	380V/50Hz, 3PH
Total power	6.35 KW	8.7 KW	8.7 KW	9.1 KW
Heating plate Facer	3.6 KW	6.5 KW	6.5 KW	6.5 KW
	2.0 KW	1.1 KW	1.1 KW	1.5 KW
Hydraulic station	0.75 KW	1.1 KW	1.1 KW	1.1 KW
Pressure adjusting range	0-8 MPa	0-10 MPa	0-10 MPa	0-10 MPa



Max Temperature	270ºC	270ºC	270ºC	270ºC
Temperature Deviation	±5ºC	±7ºC	±7ºC	±7ºC
Piston Area	20.02 CM^2	22.38 CM^2	22.38 CM^2	22.38 CM^2



AI series 2"-14"



Model	WP 200 AI	WP 250 AI	WP 315 AI	WP 355 AI
Welding range (mm)	2"-6"	2"-8"	3"-10"	3"-14"
Standard reducers (mm)	2"-2.5"-3"-4"-6"	2"-2.5"-3"-4"-6"-8"	3"-4"-6"-8"-10"	3"-4"-6"-8"-10"-12"-14"
Power supply	220V/50Hz, 1PH	220V/50Hz, 1PH	220V/50Hz, 1PH	220V/50Hz, 1PH
Total power	3.95 KW	5.05 KW	5.85 KW	6.35 KW
Heating plate Facer	1.8 KW	2.3 KW	3.1 KW	3.6 KW
Hydraulic station	1.4 KW	2.0 KW	2.0 KW	2.0 KW
	0.75 KW	0.75 KW	0.75 KW	0.75 KW
Pressure adjusting range	0-8 MPa	0-8 MPa	0-8MPa	0-8 MPa
Max Temperature	270ºC	270ºC	270ºC	270ºC
Temperature Deviation	±5ºC	±5ºC	±5ºC	±5ºC
Piston Area	15.32 CM^2	11 CM^2	20.02 CM^2	20.02 CM^2


WELPING

800
WELPING



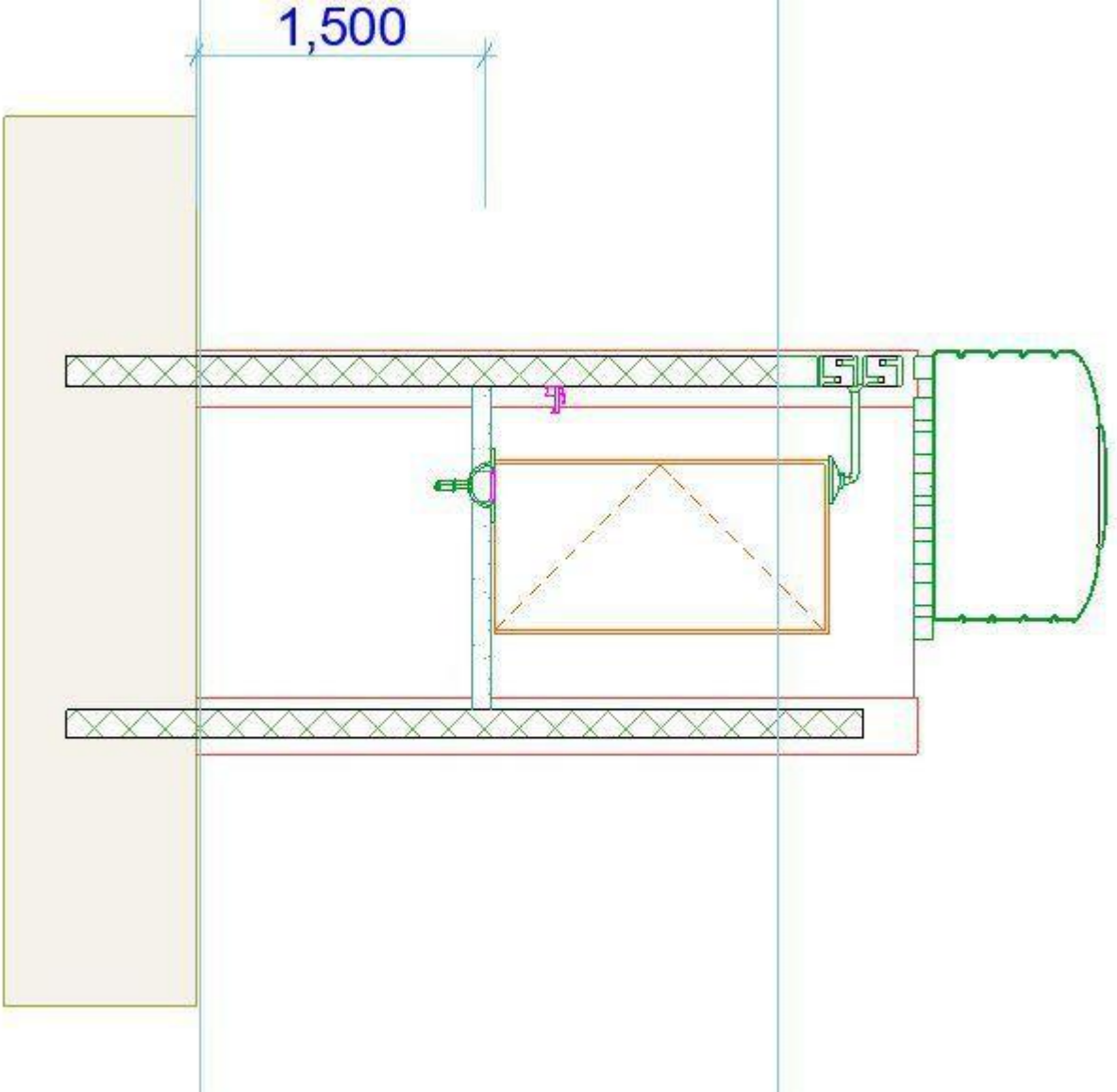
1,500

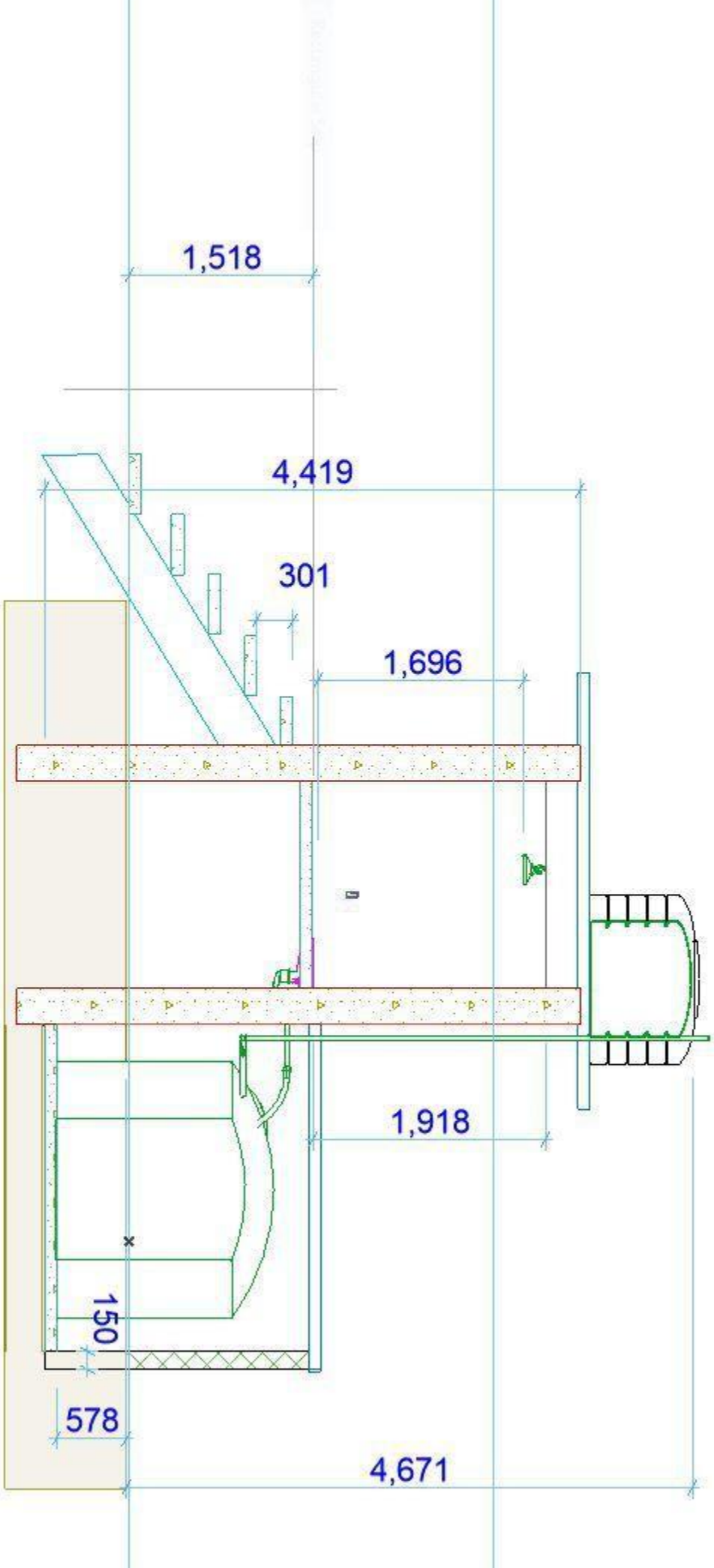
1,518
4,419
301
1,696
1,918
150
578
4,671

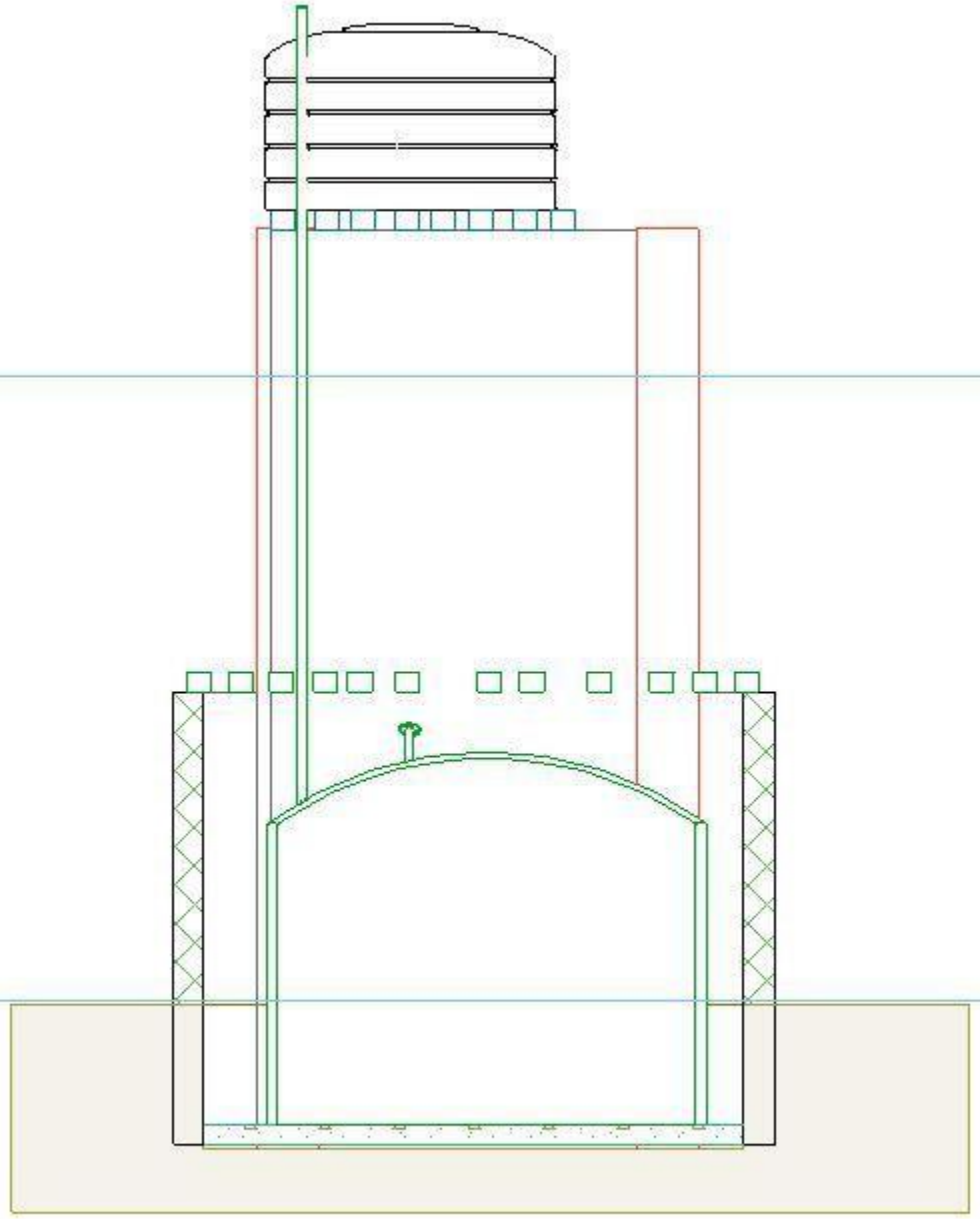

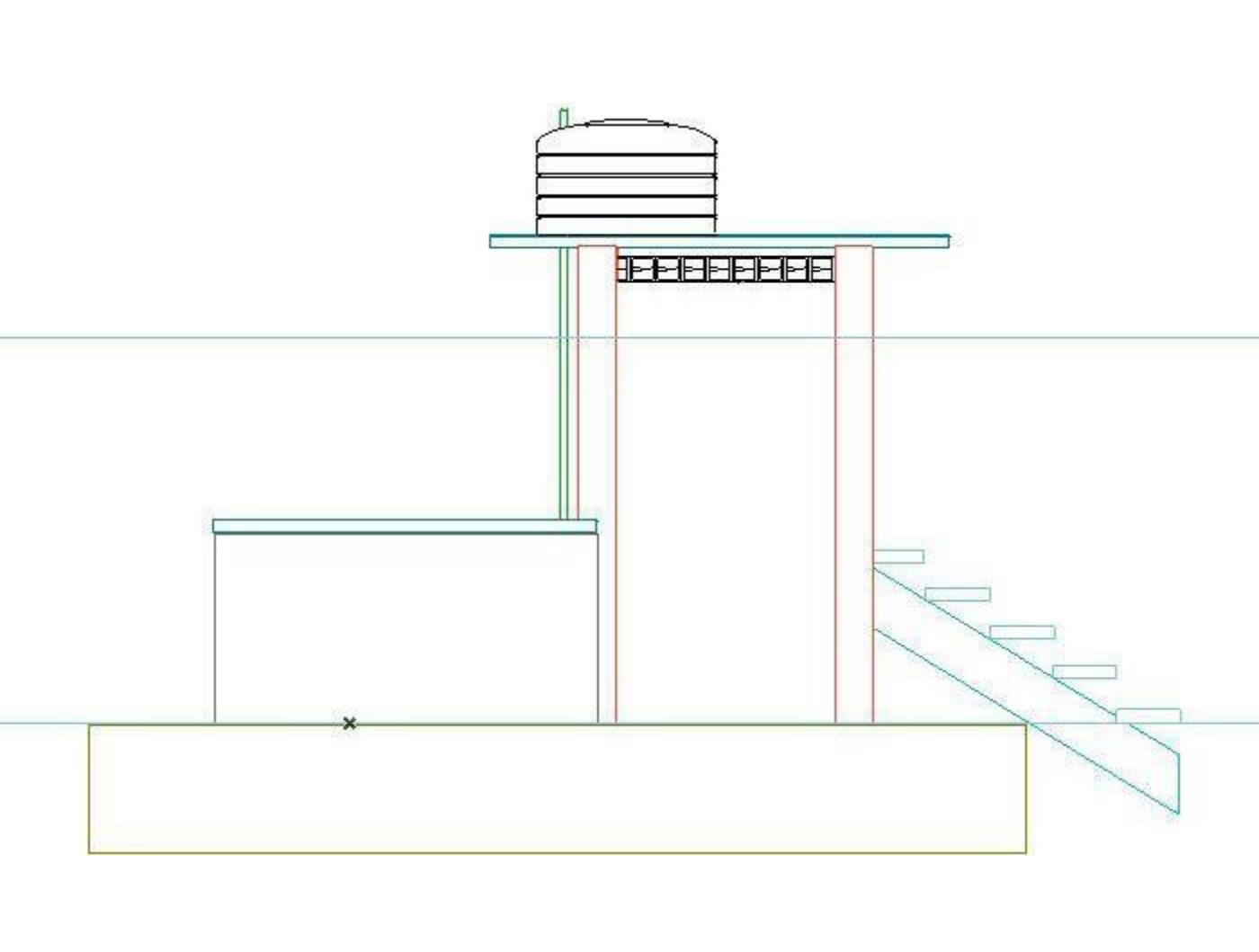

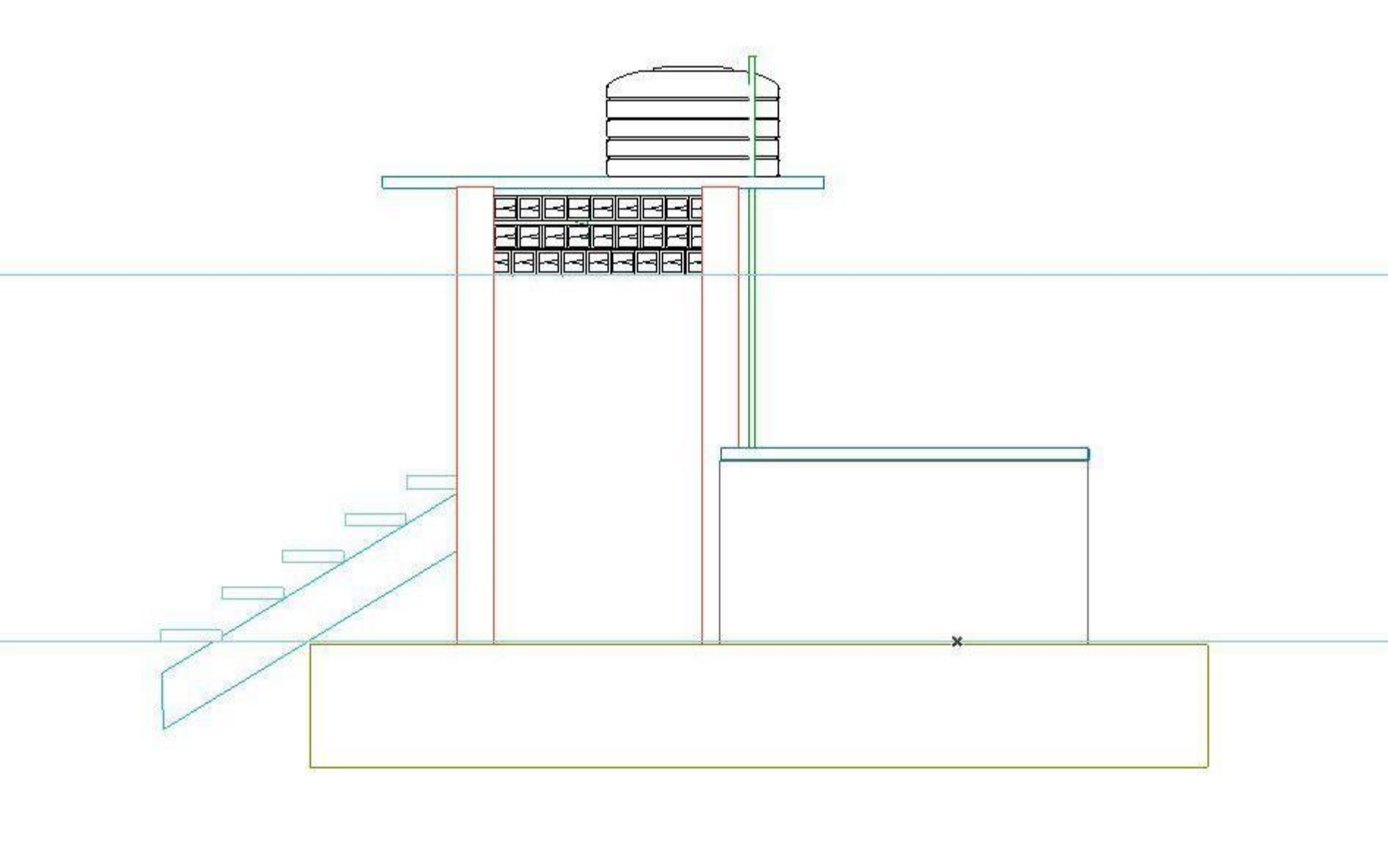

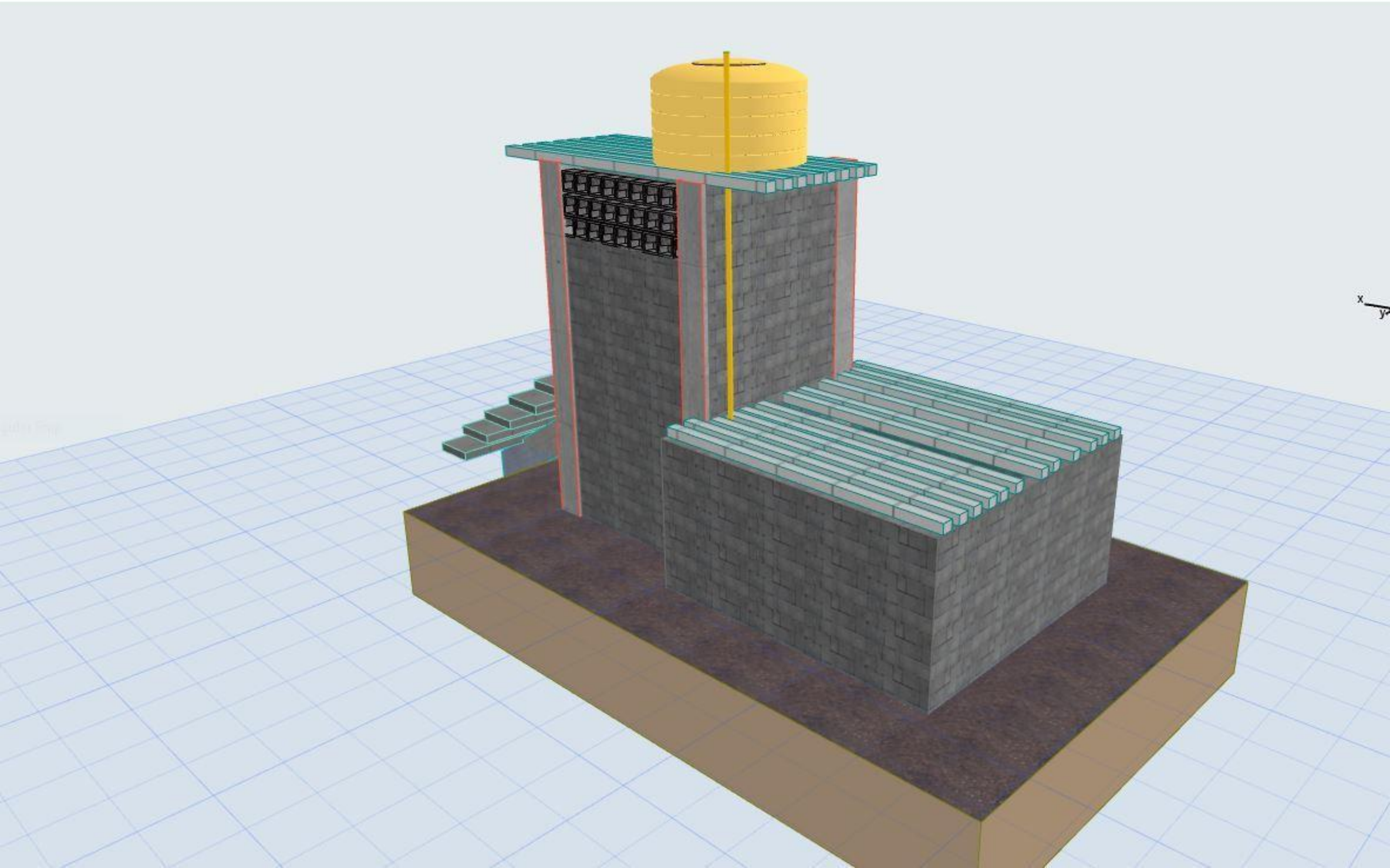

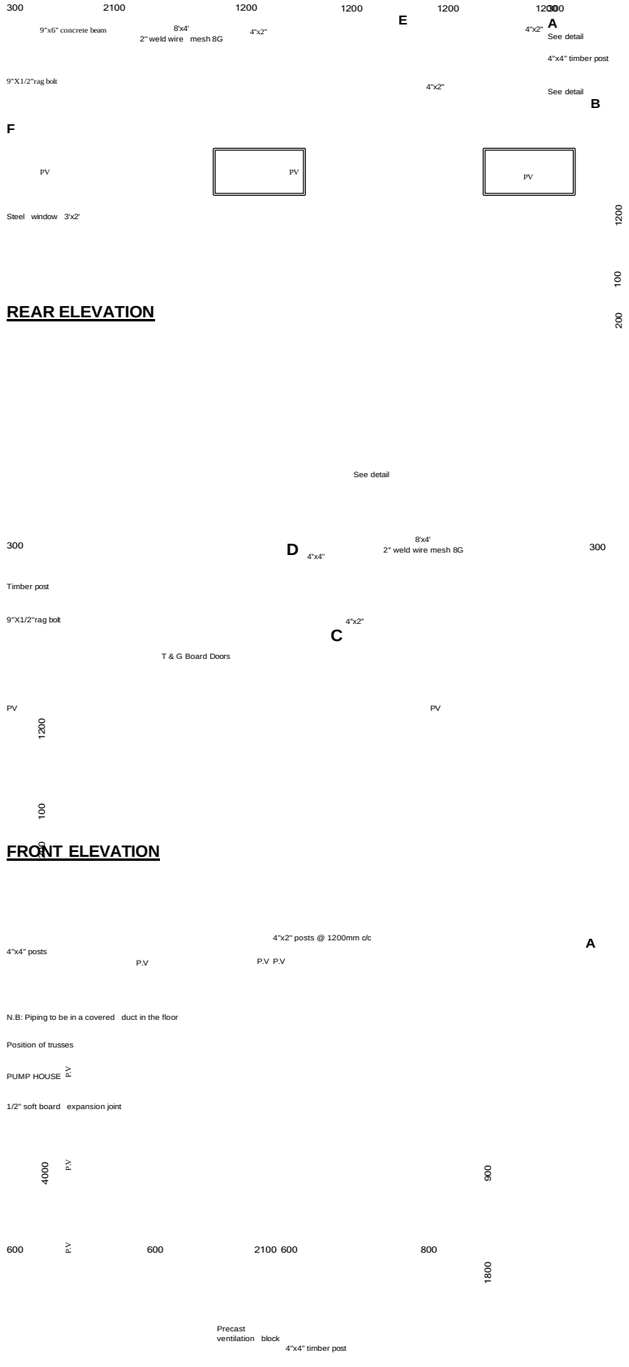





END ELEVATION

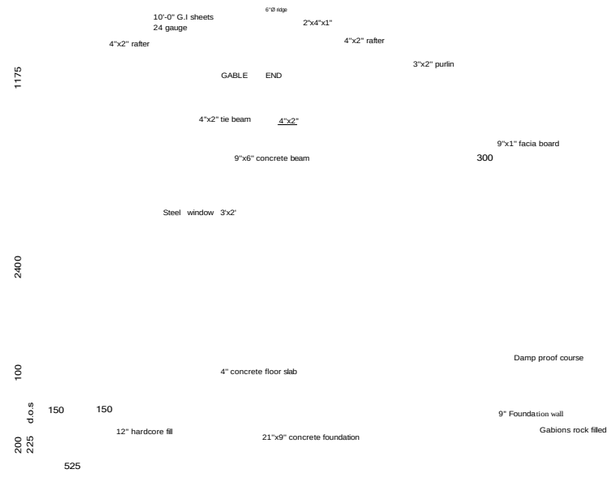

SECTION ELEVATION A-A

Rock filled

4"x2" door frame

Control House

Precast ventilation block

A

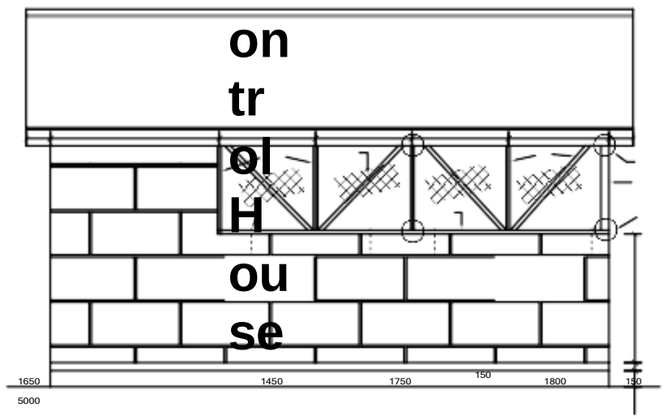

PLAN

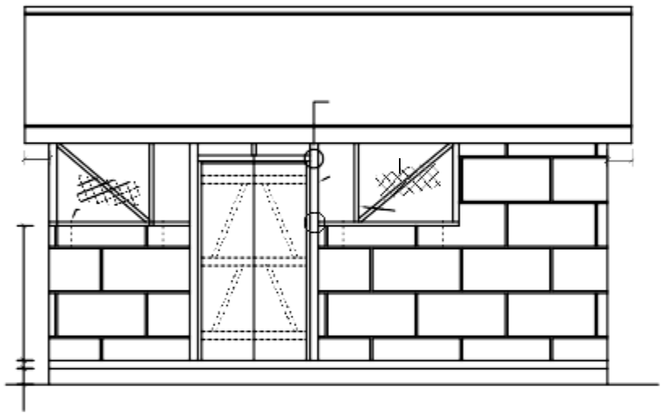

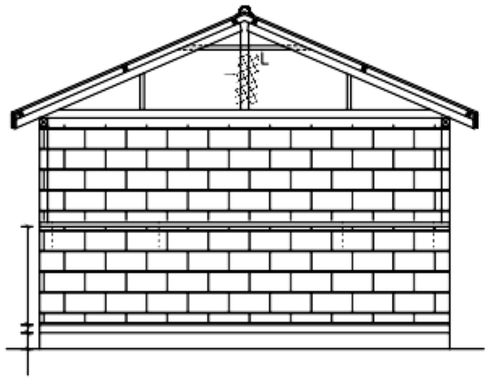

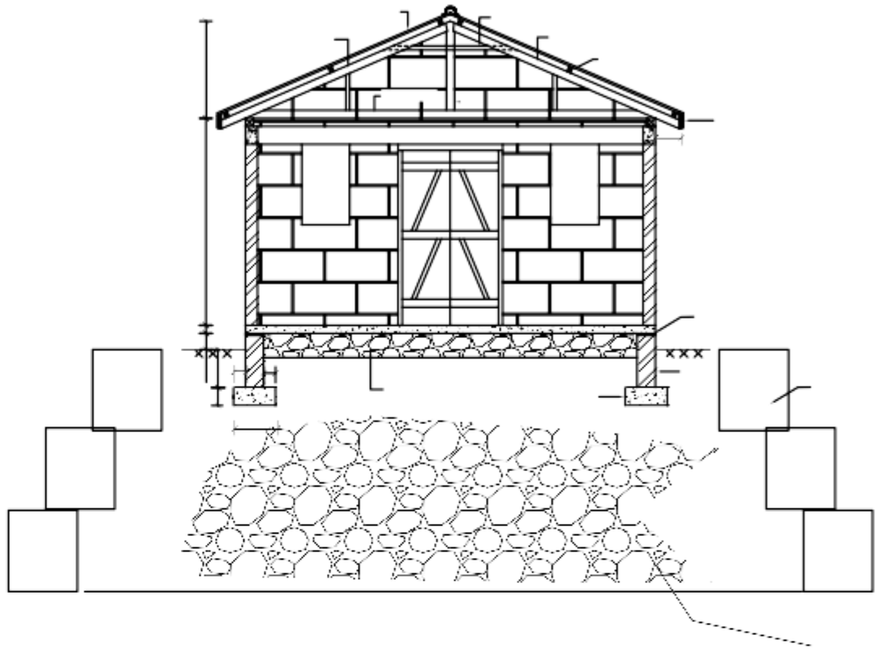

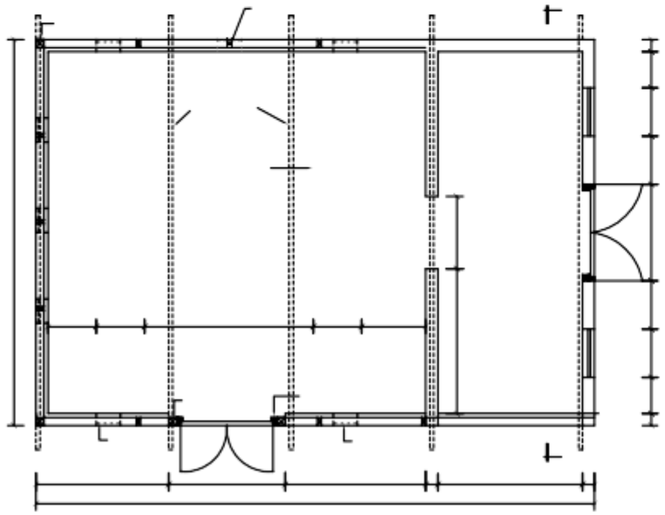

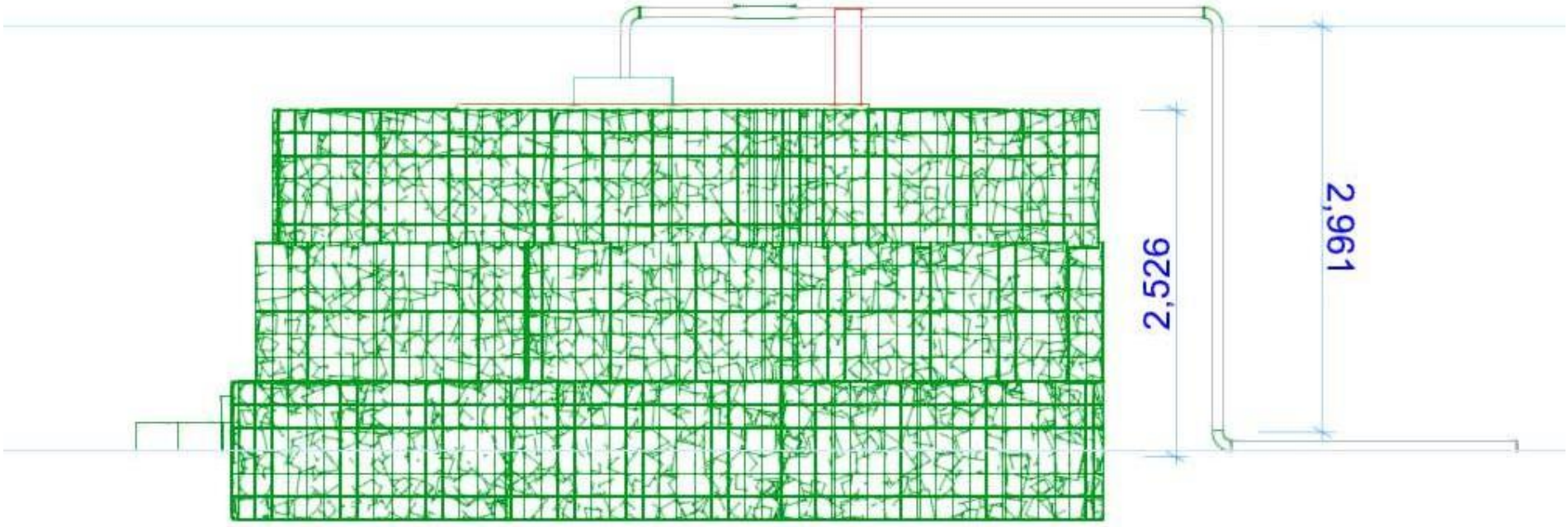
2,526
2,961

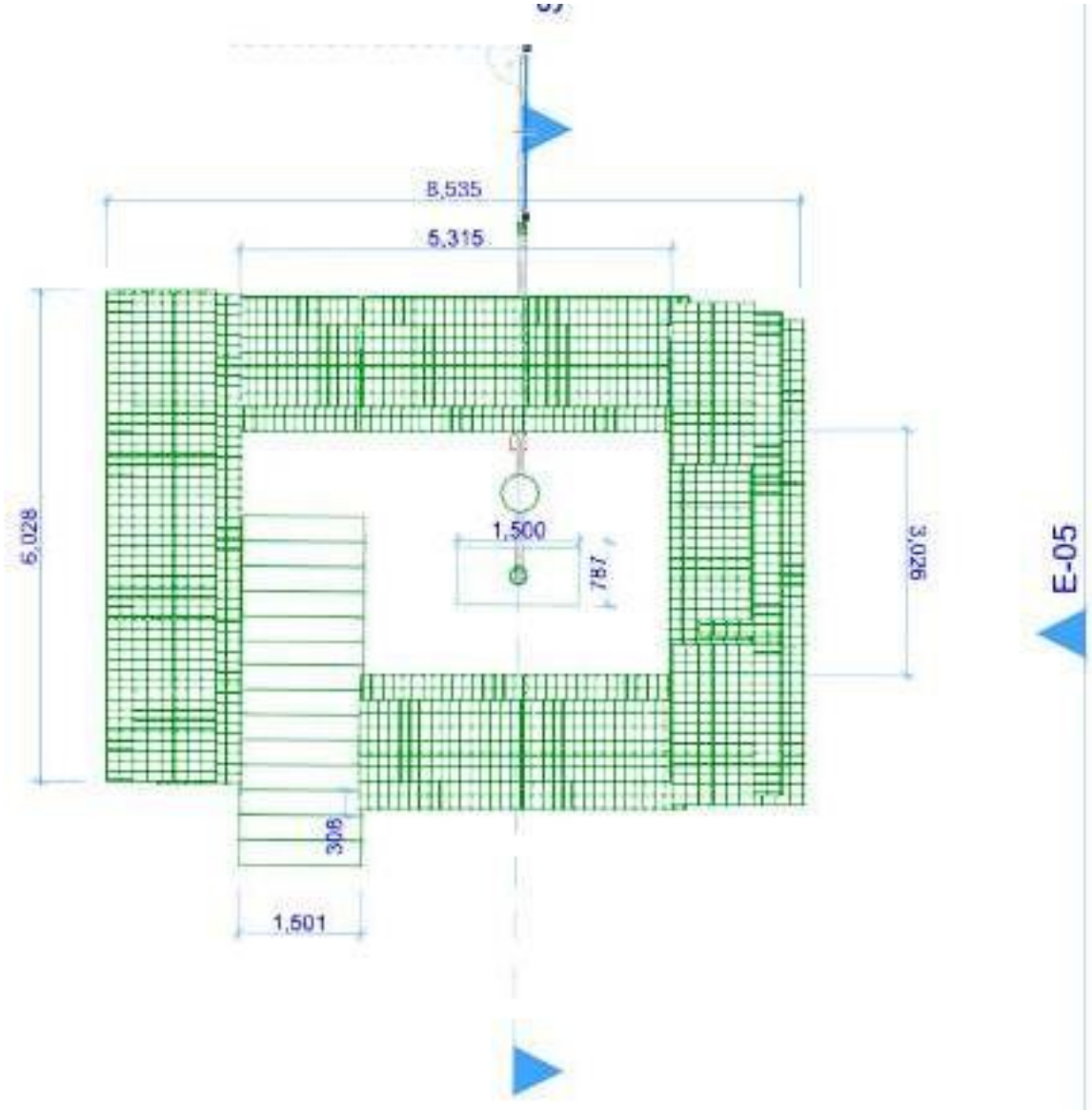
8,535
5,315
6,028
1,500
787
3,026
306
1,501
E-05

Book of drawings Vol 1

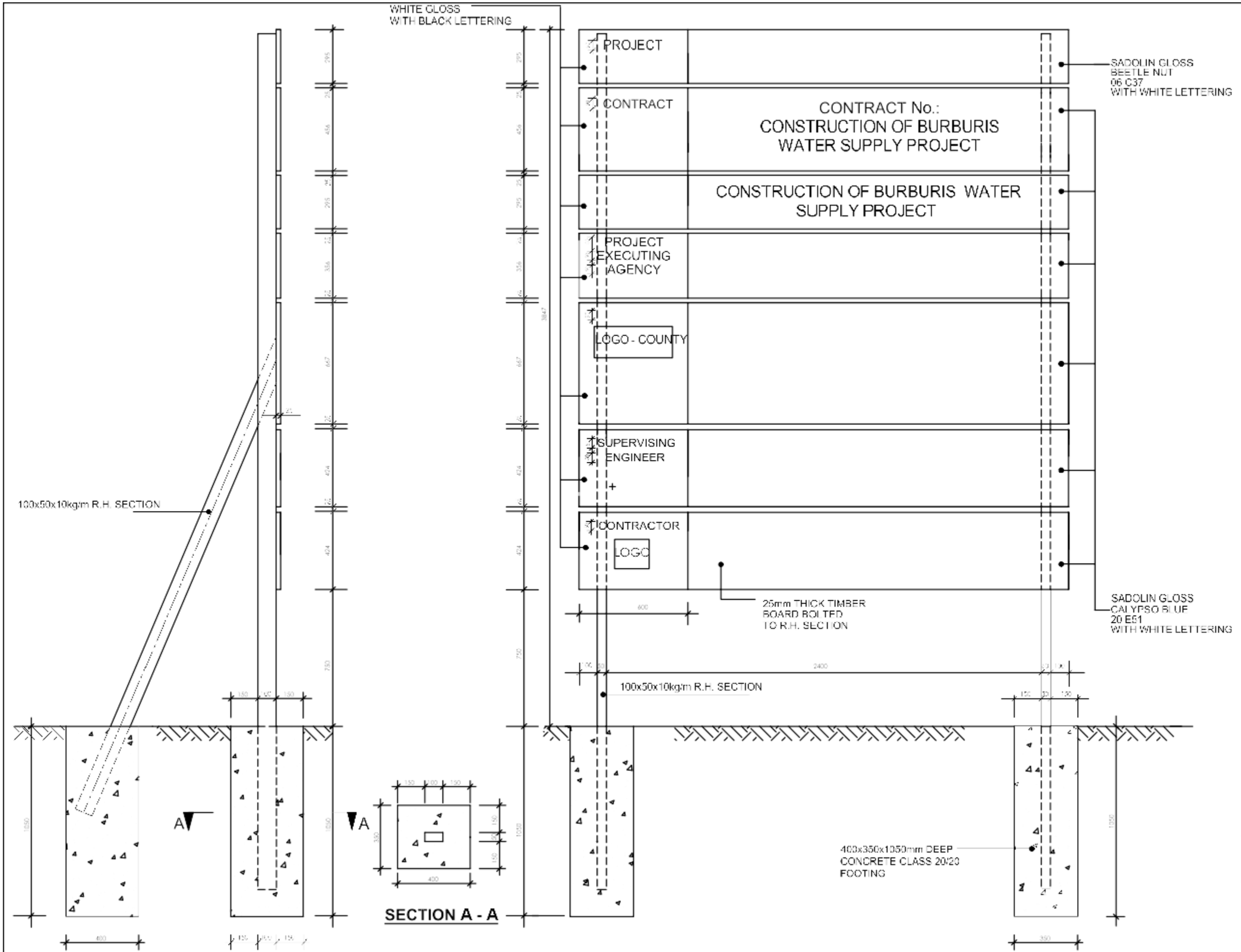

NOTES

1. [illegible] AND APPROVED IN CONSULTATION WITH THE [illegible] CONSTRUCTION OF THE [illegible] SIGNBOARD
2. DIMENSIONS ARE IN MM UNLESS OTHERWISE STATED

CONSTRUCTION OF BURBURIS WATER SUPPLY PROJECT

DETAILS OF DRAWING:

STANDARD DRAWINGS

PROJECT SIGNBOARD DETAILS

Designed by:	Drawn by:
Checked by:	Approved by:
Scale: 1:40	Date: MAY, 2025
Job No.: [illegible]	ACAD File:
DRG No. Dwg/01	REV

AIR VALVE CHAMBER

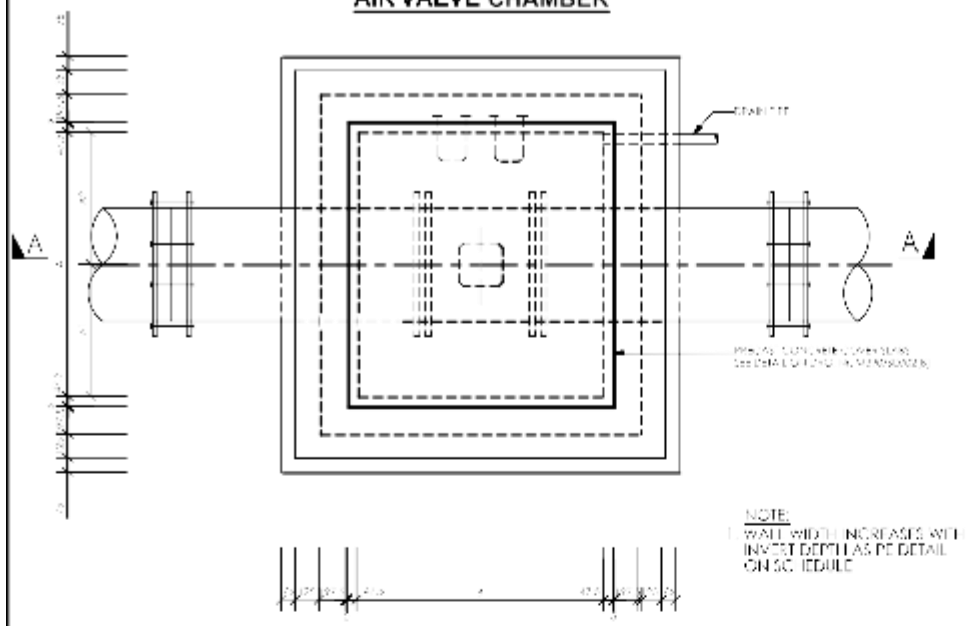

NOTE:
1. WALL WIDTH INCREASES WITH INVERT DEPTH AS PE DETAIL ON SCHEDULE

PLAN OF CHAMBER
SCALE 1:40

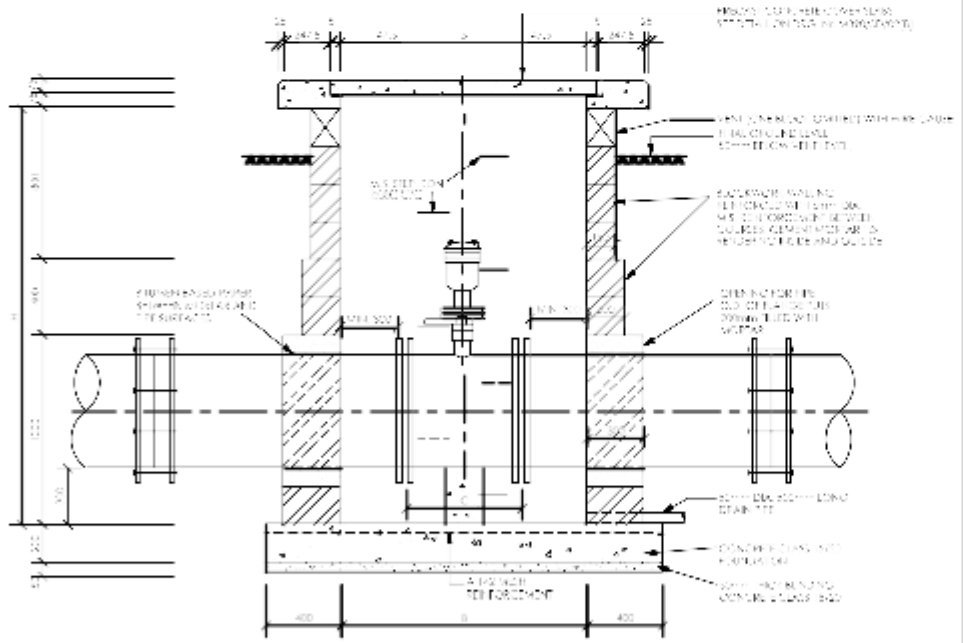

SECTION A-A
SCALE 1:40

VALVE CHAMBER DETAILS AT JUNCTIONS

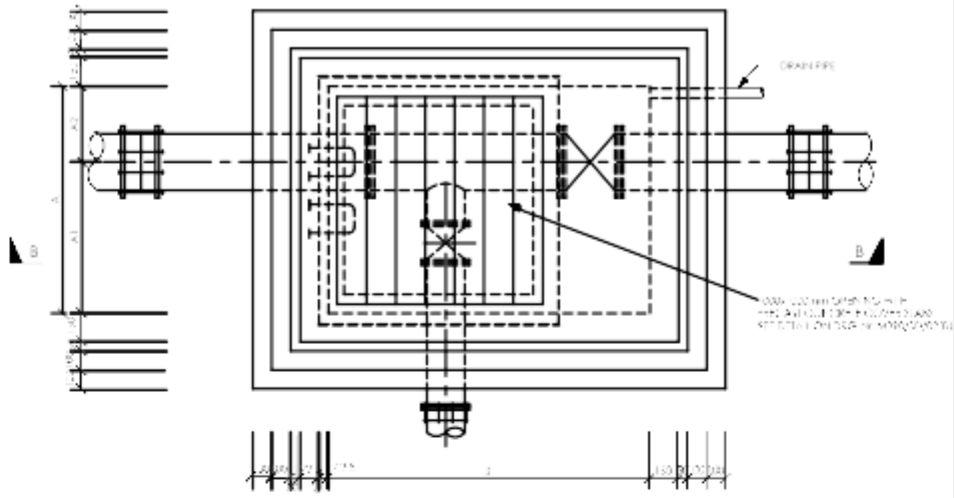

NOTE:
1. WALL WIDTH INCREASES WITH INVERT DEPTH AS PE DETAIL ON SCHEDULE

PLAN OF CHAMBER
SCALE 1:40

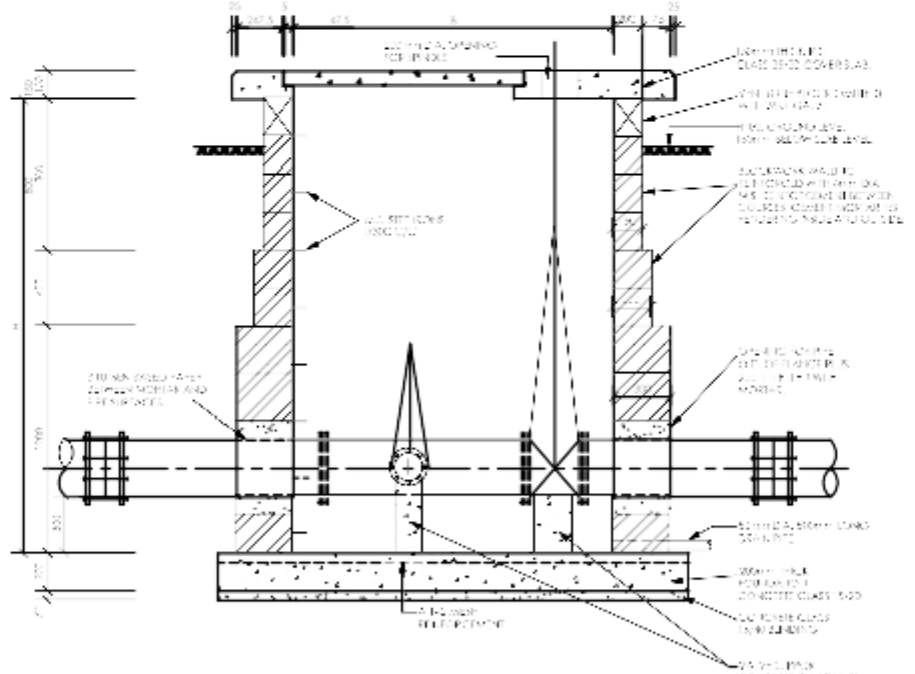

SECTION B-B
SCALE 1:40

VALVE BOX DETAIL FOR WASHOUT/VALVE

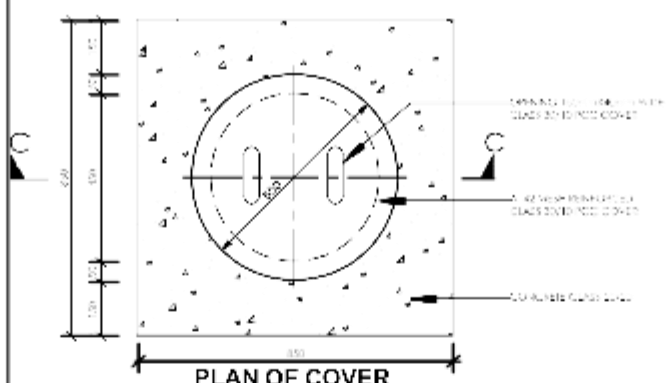

PLAN OF COVER
SCALE 1:20

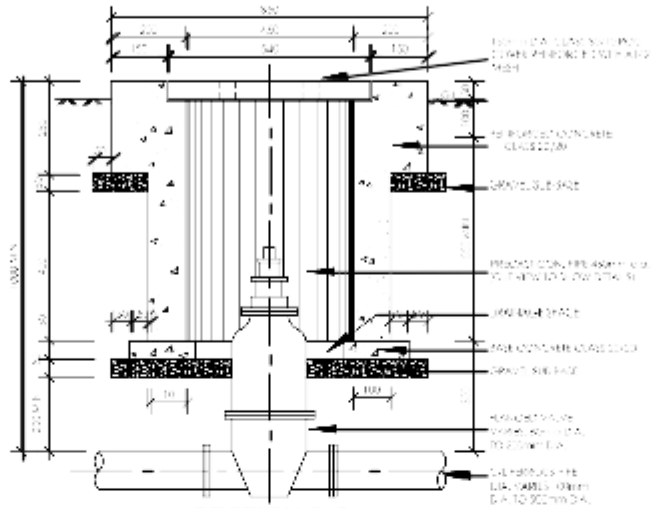

SECTION C-C
SCALE 1:20

VALVE BOX DETAIL FOR FIRE HYDRANT

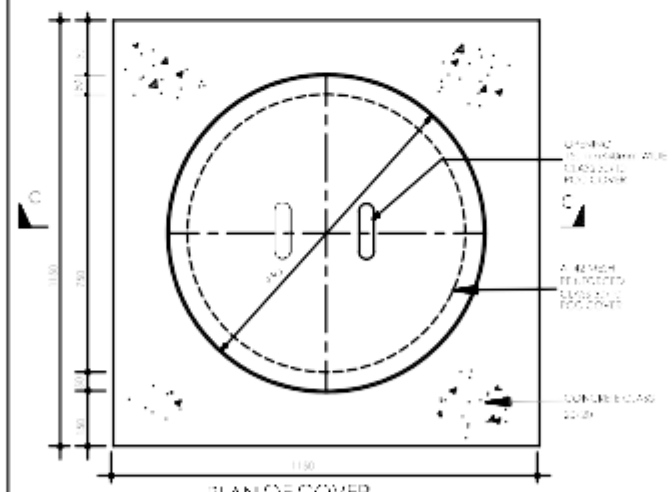

PLAN OF COVER
SCALE 1:20

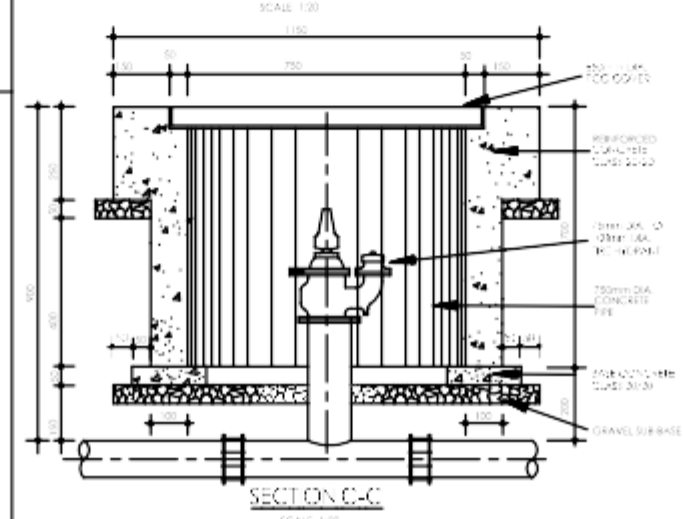

SECTION C-C
SCALE 1:20

NOTES

1. DIMENSIONS ARE SHOWN IN MILLIMETRES UNLESS OTHERWISE STATED

ABBREVIATIONS

P.C.C. - PRECAST CONCRETE
mm - MILLIMETRES
O.D. - OUTSIDE DIAMETER
M.S. - MILD STEEL
DIA. - DIAMETER
NO. - NUMBER
R.C. - REINFORCED CONCRETE
c/c - CENTRE TO CENTRE

CONSTRUCTION DETAILS FOR VALVE CHAMBERS

MAINS DIAMETER (mm)	PLAN SIZE OF CHAMBER (INTERNAL DIMENSIONS) A(mm) x B(mm)
100	1200 x 1200
150	1200 x 1200
200	1400 x 1200
250	1500 x 1200
300	1500 x 1200
350	1800 x 1200
400	1800 x 1200
450	1400 x 1400
500	1400 x 1200

CHAMBER SIZE SCHEDULE FOR VARIOUS PIPE SIZES

INVERT DEPTHS (mm)	HEIGHT OF WALL (mm)	WALL WIDTH (mm)
0 - 800	800	150 - MASONRY WALL
800 - 1200	400	200 - MASONRY WALL
1200 - 2400	1200	300 - MASONRY WALL
2400 - 3000	600	350 - MASONRY WALL
DEPTH MORE THAN 3000	-	300mm REINFORCED CONCRETE (CLASS 25/20) WALL

CHAMBER DEPTHS & WALL THICKNESS SCHDULE

CONSTRUCTION OF BURBURIS WATER SUPPLY PROJECT

DETAILS OF DRAWING:

STANDARD DRAWINGS

DETAILS OF VALVE CHAMBERS

Designed by		Drawn by	AMI
Checked by		Approved by	
Scale	1:100	Date	MAY 2025
Job No.		ACAD File	
DRG No.	Dwg/02		REV

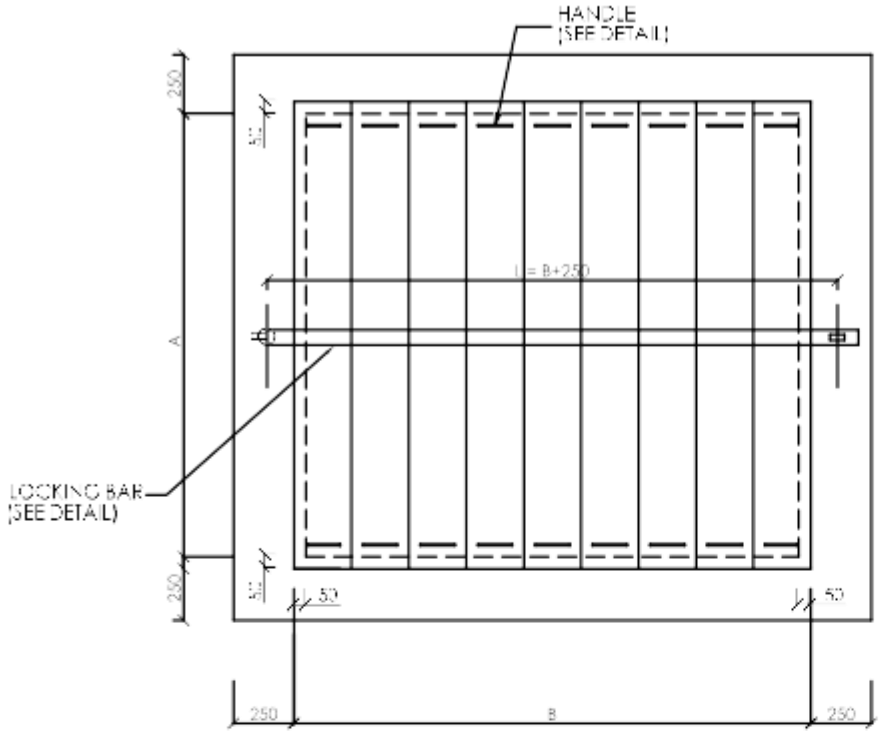

COVER FOR AIR VALVE CHAMBERS

SCALE A1 - 1:10
A3 - 1:20

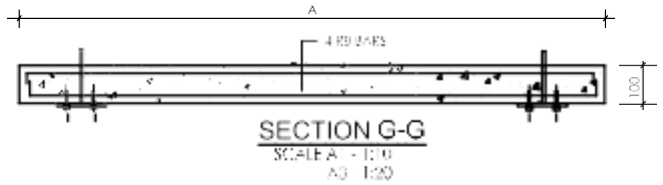

SECTION G-G

SCALE A1 - 1:10
A3 - 1:20

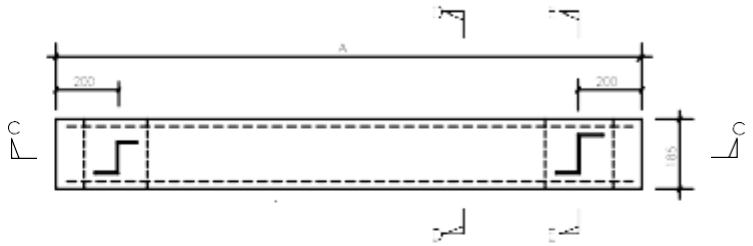

PLAN

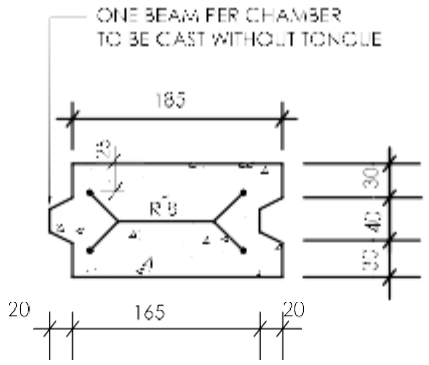

SECTION D-D

NTS

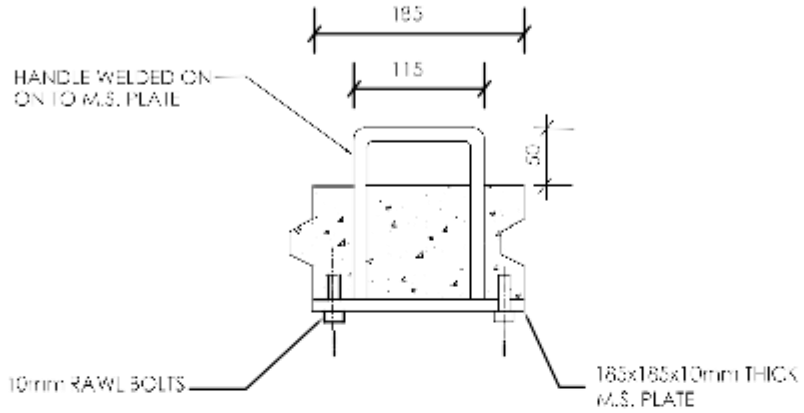

SECTION E-E

NTS

DETAIL OF PRECAST CONCRETE COVER SLAB

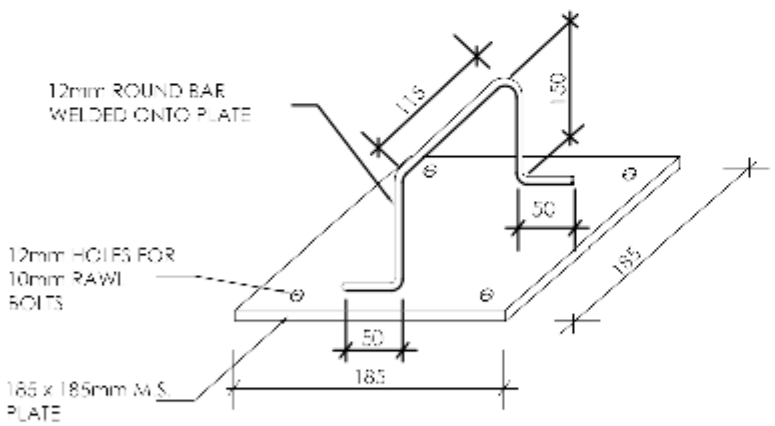

DETAIL OF HANDLE

NTS

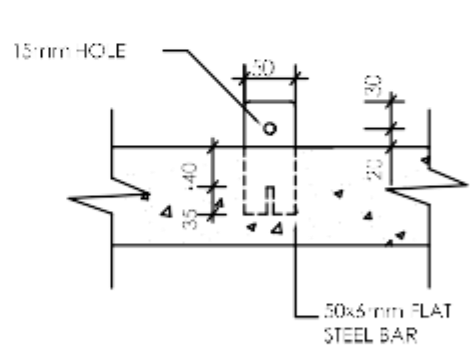

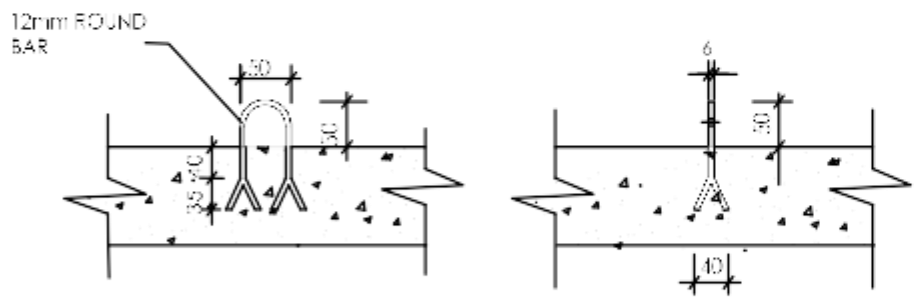

SECTIONS

COVER SIZE SCHDULE

CHAMBER INTERNAL DIMENSIONS (mm)	SIZE OF COVER A (mm) x B(mm)
1200 X 1200	1300 X 1300
1200 X 1200	1300 X 1300
1400 X 1200	1500 X 1500
1500 X 1200	1600 X 1300
1500 X 1200	1600 X 1300
1800 X 1200	1900 X 1300
1800 X 1200	1900 X 1300
1400 X 1400	1500 X 1500
1400 X 1200	1500 X 1300

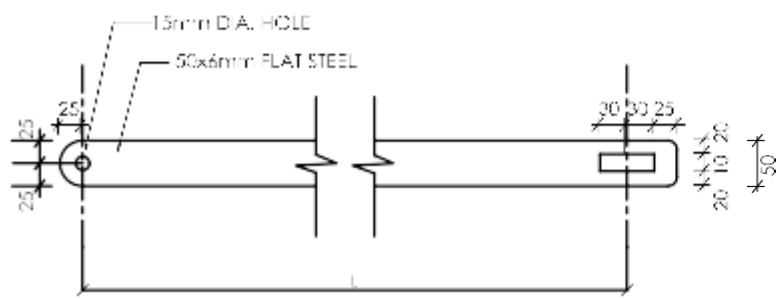

PLAN

DETAILS OF LOCKING BAR

NTS

NOTES

1. ALL DIMENSIONS ARE IN mm, UNLESS OTHERWISE STATED.

ABBREVIATIONS

M.S. = MILD STEEL.
mm = MILLIMETER
Dia. = DIAMETER
NTS = NOT TO SCALE
Nr. = NUMBER

CONSTRUCTION OF
BURBURIS WATER SUPPLY
PROJECT

DETAILS OF DRAWING:
STANDARD DRAWINGS
DETAILS OF PRECAST CONCRETE COVERS FOR VALVE CHAMBERS

Designed by:		Drawn by:	AMI
Checked by:		Approved by:	
Scale:	1:10	Date:	MAY 2018
Job No:		Appr. Date:	
DRG No.	Dwg/03	REV	

RANGE OF GROUND SLOPE (1:n)	MAXIMUM DISTANCE BETWEEN ANCHOR BLOCKS (m)
1:7 - 1:5	24
1:5 - 1:4	18
1:4 - 1:3	12
1:3 & >	EVERY PIPE LENGTH TO BE ANCHORED (BASED ON PIPE LENGTH OF 6m)

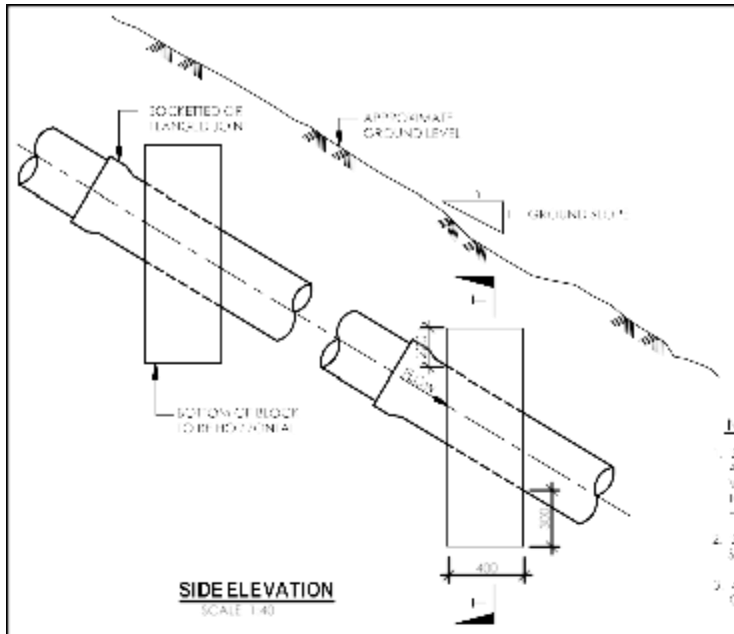

SIDE ELEVATION
SCALE 1:40

NOTES:
1. SAND APRON/CUSHION CAN BE USED AS SUPPORTS FOR PIPES LAID IN VERY SOFT GROUND BUT BLOCKS TO BE CASTON SOUND FOUNDATION/ROCK OR HARD STRATUM
2. SOCKETED JOINT TO BE LAID WITH SOCKET FACING UPSTREAM OF GRADE
3. ANCHOR BLOCKS TO BE CONSTRUCTED ON DOWNSIDE OF JOINT

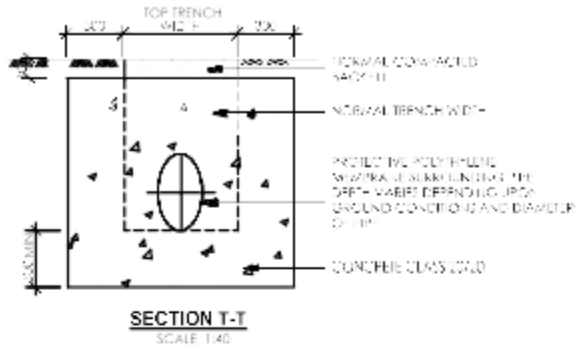

SECTION T-T
SCALE 1:40

ANCHOR BLOCK FOR STEEP GRADIENTS (SLOPES>1:6)

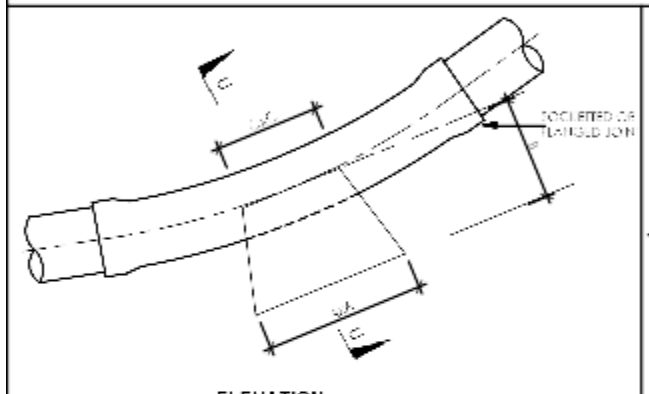

ELEVATION
SCALE 1:40

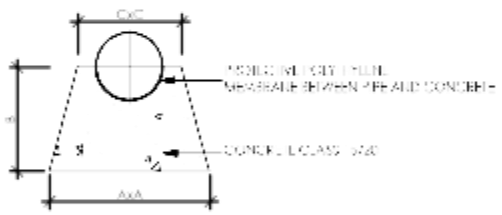

SECTION U-U
SCALE 1:40

THRUST BLOCKS ON VERTICAL BENDS (DOWN-THRUST)

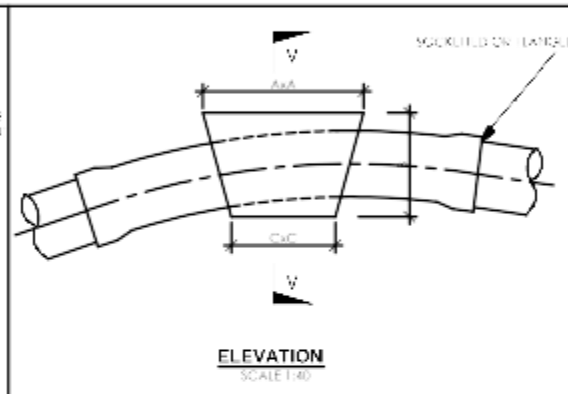

ELEVATION
SCALE 1:40

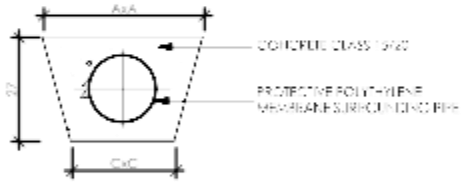

SECTION V-V
SCALE 1:40

THRUST BLOCKS ON VERTICAL BENDS (UP-THRUST)

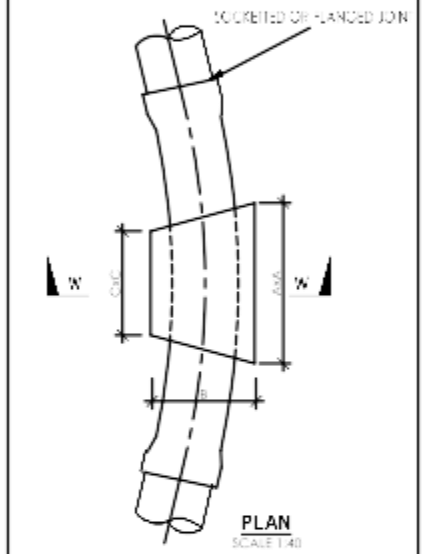

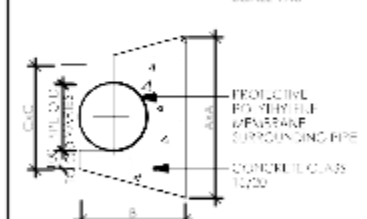

SECTION W-W
SCALE 1:40

THRUST BLOCK ON HORIZONTAL BENDS AND TEES

(ND) NOMINAL DIAMETER (mm)	THRUST BLOCK DIMENSIONS AxBxC(m), CONCRETE VOLUME (m³)						
	11 1/4° BENDS	22 1/2° BENDS	30°BENDS	45°BENDS	CAPPED ENDS & SLEEVE S	90°BENDS	REDUCERS ND=√(ND1²-ND2²)
80	0.2x0.2x0.2 (0.01m³)	0.2x0.2x0.2 (0.01m³)	0.25x0.2x0.2 (0.01m³)	0.3x0.2x0.2 (0.02m³)	0.2x0.2x0.2 (0.02m³)	0.4x0.2x0.2 (0.02m³)	0.35x0.2x0.2 (0.02m³)
100	0.2x0.2x0.2 (0.01m³)	0.3x0.2x0.2 (0.02m³)	0.35x0.2x0.2 (0.02m³)	0.4x0.2x0.2 (0.02m³)	0.45x0.25x0.25 (0.04m³)	0.55x0.3x0.3 (0.06m³)	0.45x0.25x0.25 (0.04m³)
150	0.3x0.25x0.25 (0.02m³)	0.4x0.25x0.25 (0.03m³)	0.5x0.3x0.3 (0.05m³)	0.55x0.3x0.3 (0.06m³)	0.65x0.35x0.35 (0.10m³)	0.8x0.4x0.35 (0.16m³)	0.65x0.35x0.35 (0.10m³)
200	0.4x0.3x0.3 (0.04m³)	0.55x0.35x0.35 (0.08m³)	0.6x0.4x0.4 (0.1 m³)	0.75x0.4x0.4 (0.15m³)	0.85x0.45x0.4 (0.20m³)	1.0x0.5x0.4 (0.29m³)	0.85x0.45x0.4 (0.20m³)
250	0.5x0.35x0.35 (0.07m³)	0.65x0.4x0.4 (0.12m³)	0.75x0.45x0.45 (0.18m³)	0.9x0.45x0.45 (0.23m³)	1.1x0.55x0.45 (0.39m³)	1.2x0.6x0.45 (0.50m³)	1.1x0.55x0.45 (0.39m³)
300	0.55x0.45x0.45 (0.12m³)	0.8x0.5x0.5 (0.23m³)	0.9x0.5x0.5 (0.27m³)	1.1x0.6x0.5 (0.44m³)	1.25x0.65x0.5 (0.59m³)	1.5x0.75x0.5 (0.94m³)	1.25x0.65x0.5 (0.59m³)
350	0.6x0.5x0.5 (0.16m³)	0.85x0.55x0.55 (0.29m³)	1.0x0.55x0.55 (0.36m³)	1.2x0.6x0.55 (0.53m³)	1.4x0.7x0.55 (0.80m³)	1.6x0.8x0.55 (1.20m³)	1.4x0.7x0.55 (0.80m³)
400	0.7x0.6x0.6 (0.26m³)	0.95x0.6x0.6 (0.38m³)	1.1x0.6x0.6 (0.47m³)	1.3x0.65x0.6 (0.67m³)	1.6x0.8x0.6 (1.20m³)	1.8x0.9x0.6 (1.60m³)	1.6x0.8x0.6 (1.20m³)
450	0.8x0.65x0.65 (0.35m³)	1.1x0.65x0.65 (0.53m³)	1.3x0.65x0.65 (0.69m³)	1.5x0.75x0.65 (1.0m³)	1.8x0.9x0.65 (1.7m³)	2.0x1.0x0.65 (2.2m³)	1.8x0.9x0.65 (1.7m³)
500	0.9x0.7x0.7 (0.46m³)	1.2x0.7x0.7 (0.68m³)	1.4x0.7x0.7 (0.86m³)	1.7x0.85x0.7 (1.5m³)	2.0x1.0x0.7 (2.3m³)	2.3x1.2x0.7 (3.5m³)	2.0x1.0x0.7 (2.3m³)
600	1.1x0.8x0.8 (0.74m³)	1.5x0.8x0.8 (1.2m³)	1.7x0.9x0.8 (1.6m³)	2.0x1.0x0.8 (2.3m³)	2.3x1.2x0.8 (3.6m³)	2.7x1.4x0.8 (5.6m³)	2.3x1.2x0.8 (3.6m³)

NOTE: THE ABOVE VALUES APPLY FOR SOCKETED SPIGOT AND FLANGED OR COUPLED MILD STEEL PIPES SUBJECTED TO A WORKING PRESSURE HEAD OF 12 BAR

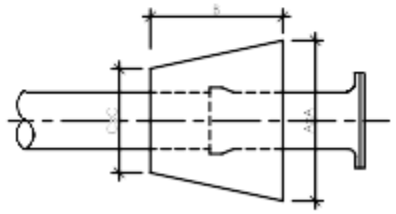

THRUST BLOCK AT CAPPED ENDS

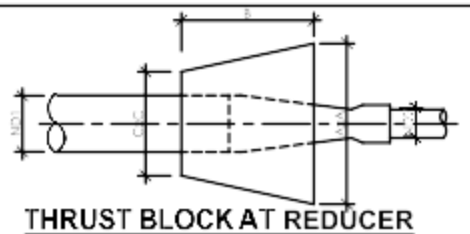

THRUST BLOCK AT REDUCER

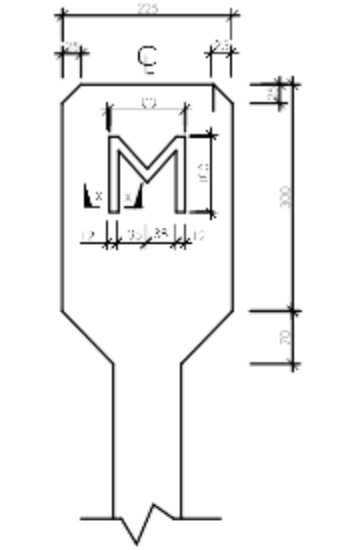

BULK METER POST
SCALE 1:10

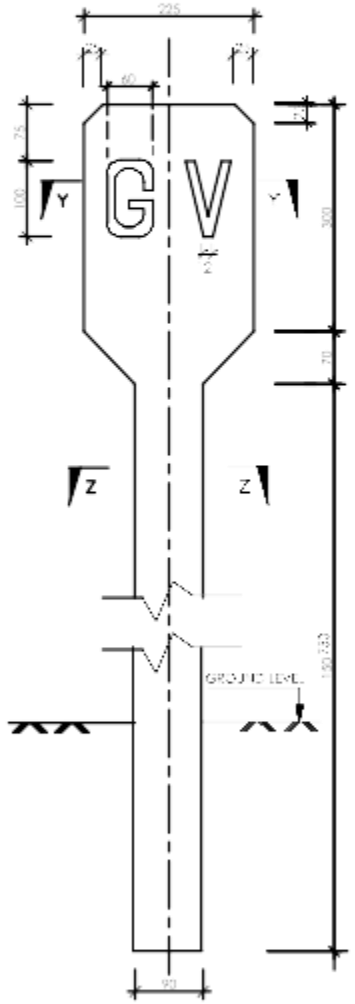

GATE VALVE INDICATOR POST
SCALE 1:10

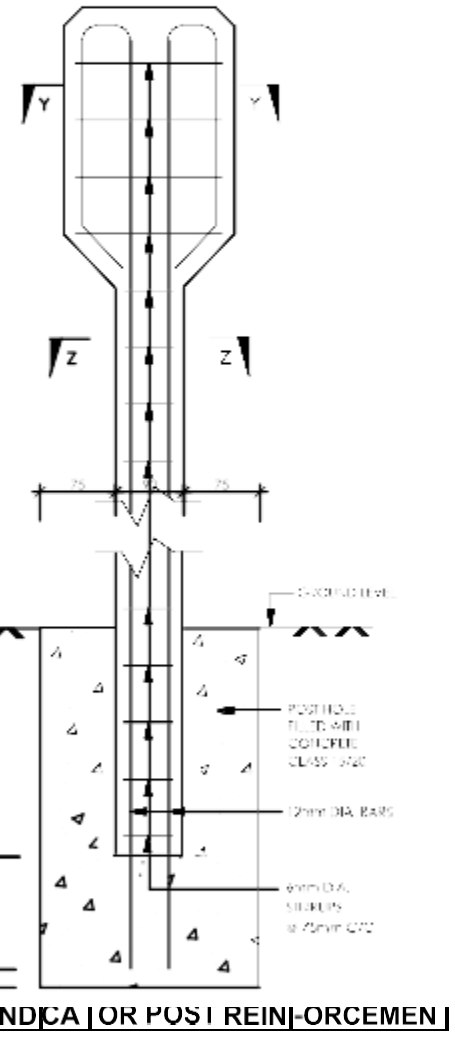

INDICATOR POST REINFORCEMENT DETAILS
SCALE 1:10

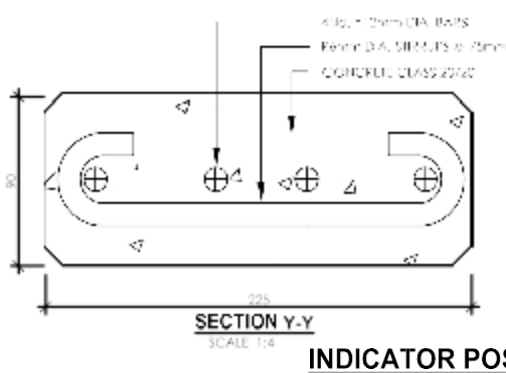

SECTION Y-Y
SCALE 1:4

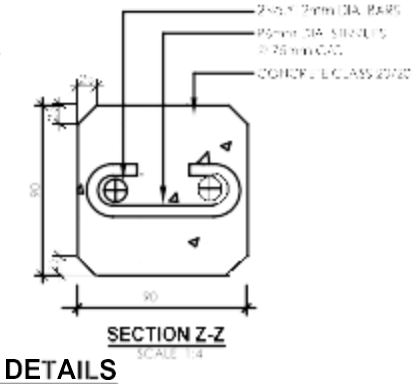

SECTION Z-Z
SCALE 1:4

INDICATOR POST DETAILS



SECTION X-X
N.T.S.

NOTES

1. ALL DIMENSIONS ARE IN mm UNLESS OTHERWISE STATED.
2. ANCHOR BLOCKS TO BE INSTALLED AT 1:3 FOR HILLS AND VALLEYS SLOPES EXCEEDING 1:6 SLOPE.
3. THRUST BLOCKS TO BE INSTALLED AT ALL HORIZONTAL AND VERTICAL BENDS, CAPPED ENDS, REDUCTAPERS AND GATE VALVES.
4. DETAILS SHOWN INDICATOR POSTS TO BE AS FOR GATE VALVE BUT DESIGNATION TO BE AS FOLLOWS:

FOR	USE
GATE VALVE	GV
AIR VALVE	AV
WASHOUT	WO
WATER MAIN	WM
SURFACE	M
'Y' JUNCTION	Y

5. ALL INDICATOR POSTS TO BE PAINTED WITH TWO COATS BLUE OIL BASED PAINT AND WHITE LETTERING TO ENGINEER'S APPROVAL.

ABBREVIATIONS

mm - MILLIMETRES
OD - OUTSIDE DIAMETER
ND - NOMINAL DIAMETR
Dia - DIAMETER
c/c - CENTRE TO CENTRE
No. - NUMBER
uPVC - UNPLASTICISED POLYVINYL CHLORIDE
m - WATER
℄ - CENTRE LINE
GV - GATE VALVE
AV - AIR VALVE
WO - WASH OUT
WM - WATER MAIN
No. - SLUICE VALVE
m^3 - CUBIC METER

CONSTRUCTION OF BURBURIS WATER SUPPLY PROJECT

DETAILS OF DRAWING:

STANDARD DRAWINGS

THRUST BLOCKS, ANCHOR BLOCKS AND INDICATOR POST DETAILS

Designed by:	Drawn by: AMI
Checked by:	Approved by:
Scale: 1:100	Date: MAY 2025
Job No.	AutoCAD Ver.

DRG No. Dwg/04 REV

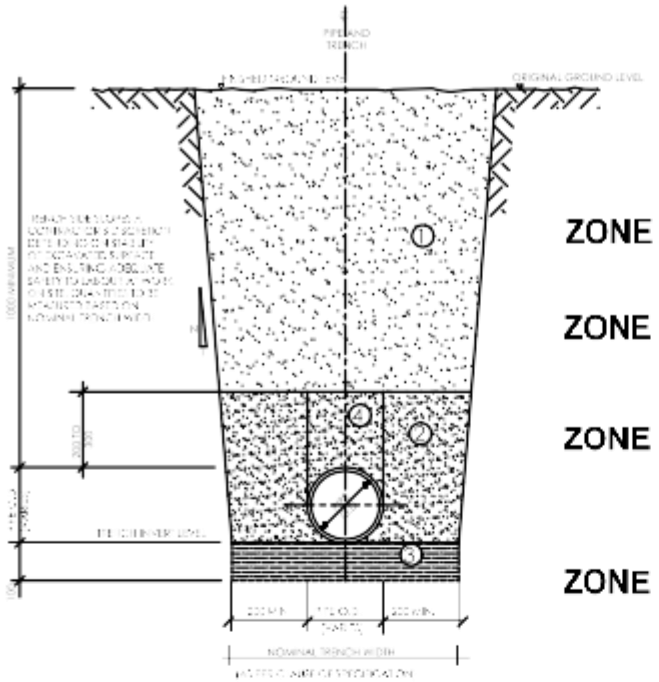

NOTES

ZONE ①
SOIL TO BE USED MAY INCLUDE FREE-DRAINING COARSE SAND GRAVEL, LOAM AND SOIL OF A FRIABLE NATURE, PARTICLES OF NOT TO EXCEED 20mm.
BACKFILL IN LAYERS NOT EXCEEDING 300mm UP TO FINISHED GROUND LEVEL, EACH LAYER BEING WELL COMPACTED TO EXPEL VOIDS
MECHANICAL COMPACTION EQUIPMENT MAY BE USED IF APPROVED BY ENGINEER.

ZONE ②
BACKFILL WITH SOIL APPROVED BY THE ENGINEER IN LAYERS NOT EXCEEDING 200mm.
THOROUGHLY COMPACT SOIL, TAMPING FOR QUALITY ON EITHER SIDE AND ALONG LOWER EDGE OF PIPE.
ONLY HAND TAMPING TO BE USED

ZONE ③
IF ROCK, SHARP PROJECTIONS, TREE ROOTS OR OTHER UNSUITABLE MATERIALS ENCOUNTERED AT 150mm ABOVE INVERT LEVEL, A FURTHER 150mm DEPTH OF MATERIAL IS TO BE EXCAVATED.
BACKFILL WITH SOIL APPROVED BY THE ENGINEER UP TO TRENCH INVERT LEVEL
THOROUGHLY COMPACT SOIL BY HAND TO GIVE A UNIFORM GRADIENT ACROSS PIPE TRENCH, LEAVING RECESSES FOR PIPE JOINTS.

ZONE ④
SIMILAR REQUIREMENTS TO ZONE 2 EXCEPT NO EXCESS TAMPING IS PERMITTED OVER PIPE

TYPICAL TRENCH DETAIL FOR RETICULATION PIPES (uPVC / HDPE OR C/L FERROUS PIPES)
SCALE 1:100

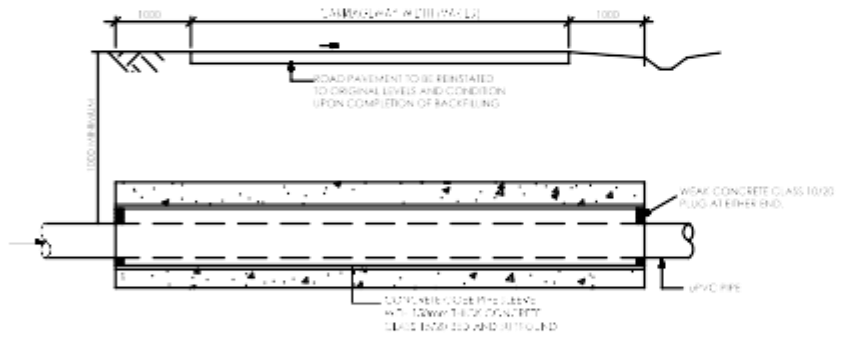

TYPICAL ROAD PIPE CROSSING DETAIL FOR uPVC PIPES
SCALE A1 1:100

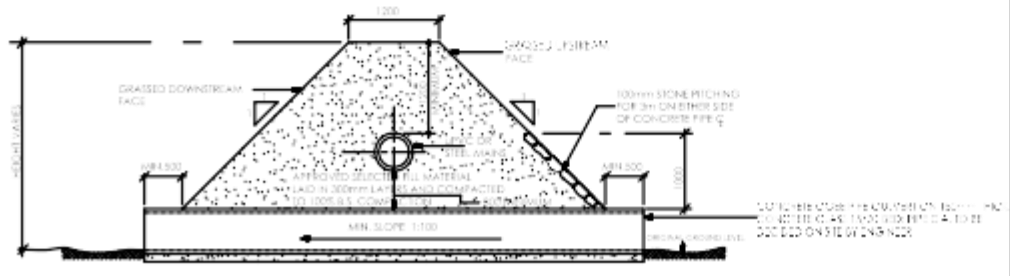

TYPICAL DETAIL OF PIPE CROSSING SEASONAL STREAM / DRAINAGE DITCH
SCALE 1:100

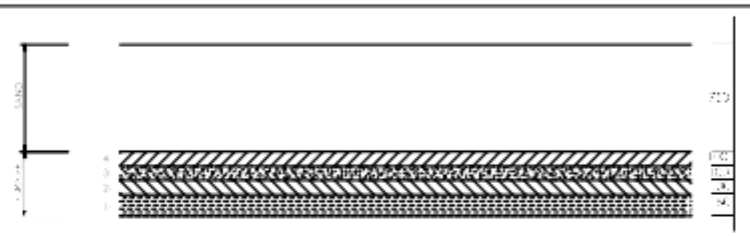

LAYER	1	2	3	4
DEPTH (mm)	150	100	100	100
PASSING SQUARE MESH	40mm (1 1/2")	20mm (3/4")	9mm (1/2")	5mm (3/16")
RETAINED	20mm (3/4")	12.5mm (1/2")	5mm (3/16")	2mm (3/32")

DETAILS OF FILTER MEDIA IN RAPID SAND FILTERS
N.T.S

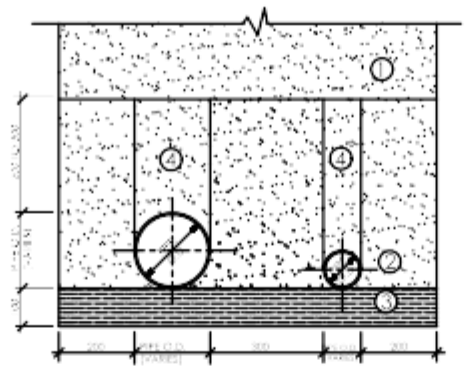

TWIN PIPES IN SINGLE TRENCH
SCALE 1:20

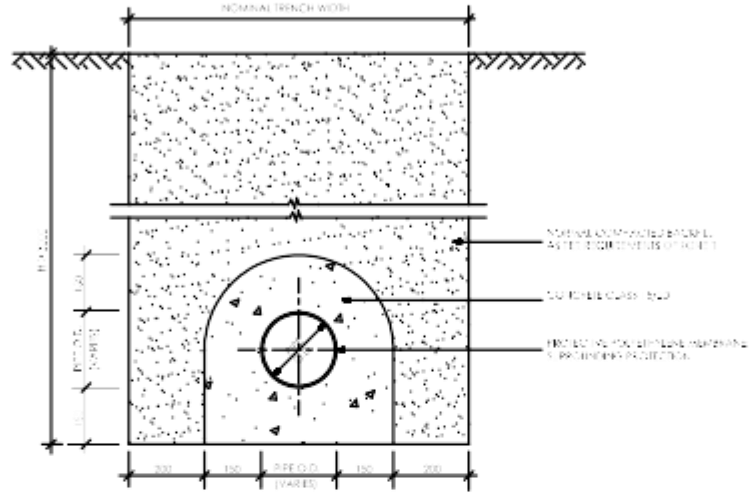

CONCRETE PROTECTION TO uPVC PIPES LAID AT DEPTHS GREATER THAN 3.0m
SCALE 1:20

PIPE DIAMETER SCHEDULES

uPVC WATER PRESSURE PIPES TO KS 455 PART 2 1991			WALL THICKNESS (mm)							
			PN 6 CLASS 'D'		PN 10 CLASS 'C'		PN 12.5 CLASS 'B'		PN 16 CLASS 'A'	
NOMINAL OUTSIDE DIAMETER (mm)	MEAN OUTSIDE DIAMETER (mm)									
	MIN	MAX	MIN	MAX	MIN	MAX	MIN	MAX	MIN	MAX
63	63	63.3	1.50	1.8	1.90	2.2	2.30	2.7	2.90	3.4
75	75	75.3	1.80	2.1	1.90	2.3	2.80	3.3	3.50	4.1
90	90	90.3	2.20	2.6	2.70	3.2	3.40	4.0	4.30	5.0
110	110	110.3	2.70	3.2	3.30	3.9	4.20	4.9	5.30	6.2
125	125	125.4	3.10	3.6	3.80	4.4	4.80	5.6	6.00	6.9
140	140	140.4	3.50	4.0	4.30	5.0	5.40	6.2	6.70	7.7
160	160	160.4	4.00	4.5	4.90	5.6	6.20	7.1	7.70	8.8
180	180	180.4	4.40	5.0	5.50	6.3	6.90	7.9	8.60	9.8
200	200	200.5	4.90	5.5	6.10	6.9	7.70	8.8	9.60	10.9
225	225	225.6	5.50	6.2	6.90	7.8	8.60	9.8	10.80	12.3
250	250	250.6	6.20	6.9	7.70	8.6	9.60	10.9	11.90	13.5
280	280	280.7	6.90	7.7	8.60	9.6	10.70	12.1	13.40	15.1
315	315	315.8	7.80	8.6	9.70	10.8	12.10	13.6	15.00	16.9

uPVC PIPES MADE TO CLASS			
CLASS 'D'	CLASS 'C'	CLASS 'B'	CLASS 'A'
4.5 BAR	6.3 BAR	8.1 BAR	10 BAR
45m HEAD OF WATER	63m HEAD OF WATER	81m HEAD OF WATER	100m HEAD OF WATER

BRITISH LAYED STEEL PIPES TO BS 534 1983	
NOMINAL INTERNAL DIAMETER (mm)	OUTSIDE DIAMETER (mm)
50	60.3
65	76.1
80	88.9
100	114.3
125	139.7
150	168.3
200	219.1
225	244.5
250	273.0
300	323.9
350	355.6
400	406.4
450	457.0
500	508.0
600	610.0

DUCTILE IRON PIPES TO B.S. 4772 1988	
NOMINAL INTERNAL DIAMETER (mm)	OUTSIDE DIAMETER (mm)
80 *	99.1
85 *	104.1
90	109.1
100	119.3
125 *	145.3
150	170
200	222
250	274
300	326
350	378
400	429
450	480
500	532
600	635

NOTE
ALL DIMENSIONS SHOWN ABOVE ARE BASED ON THE CURRENT RELEVANT EDITION OF BRITISH STANDARDS AND ARE FOR THE TENDERERS INFORMATION.
TENDERERS ARE REFERRED TO BILL NOTE FOR REFERENCE TO ANY OTHER APPROVED EQUIVALENT SPECIFICATION. THE TENDERER'S ATTENTION IS ALSO DRAWN TO CLAUSE 35 OF THE PREAMBLE TO THE BILL OF QUANTITIES REGARDING ALTERNATIVE TYPES AND SUPPLIERS.

NOTES

ALL DIMENSIONS ARE IN mm UNLESS OTHERWISE STATED

ABBREVIATIONS

O.D. - Outside Diameter
uPVC - Unplasticized Polyvinyl Chloride
C/L or C.L. - Centre line
mm - Milimeter
m - Meter
> - Greater than
KS - Kenya Standard
B.S. - British Standard
SRN - Standard Reference Number
MIN - Minimum

CONSTRUCTION OF BURBURIS WATER SUPPLY PROJECT

DETAILS OF DRAWING
STANDARD DRAWINGS
DETAILS OF TRENCH AND PIPE CROSSINGS FOR WATER PIPES AND FILTER MEDIA DETAILS

Designed By:		Drawn By:	AKI
Checked By:		Approved By:	
Scale:	1:100	Date:	MAY, 2025
Job No:			
DRG No.	Dwg/05	REV	

TYPICAL BITUMINOUS ROAD DETAILS

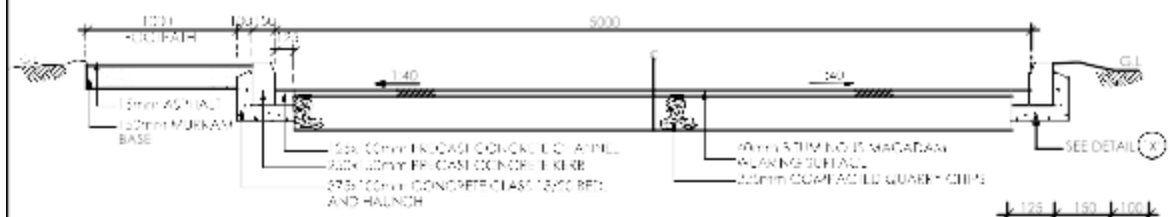

TYPICAL SECTION OF BITUMINOUS ROAD

SCALE 1:50

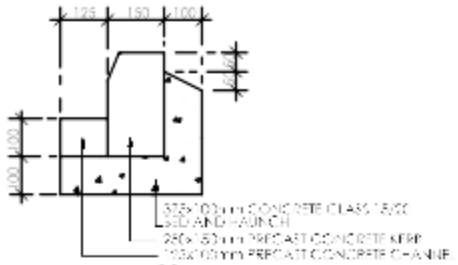

DETAIL (X)

SCALE 1:20



TYPICAL SECTION OF FOOTPATH

SCALE 1:25

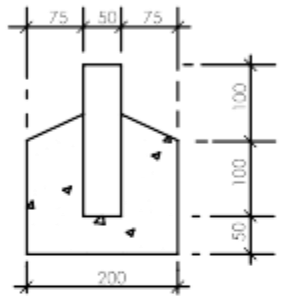

DETAIL (Y)

SCALE 1:10

TYPICAL MURRAM ROAD DETAILS

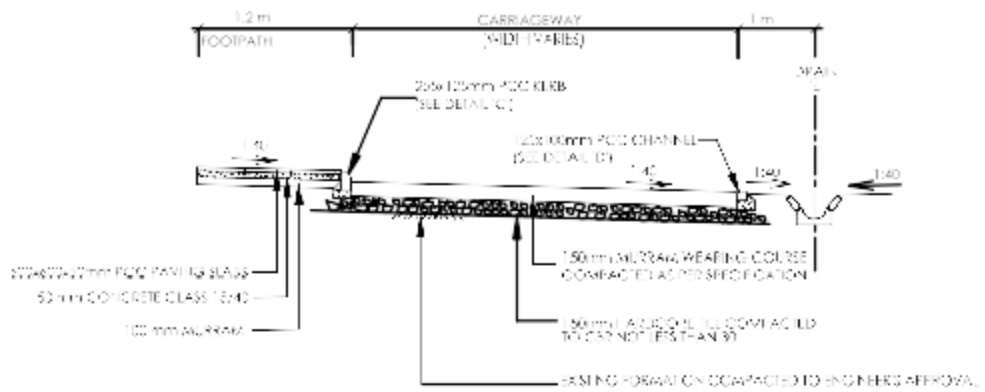

TYPICAL SECTION OF MURRAM ROAD

SCALE 1:50

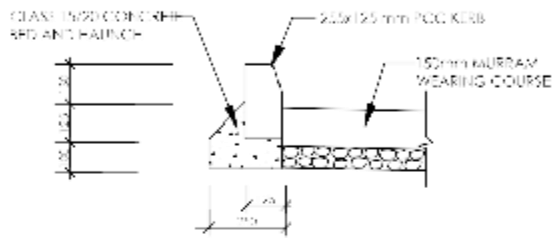

DETAIL 'C'
TYPICAL DETAIL OF KERB

SCALE 1:25

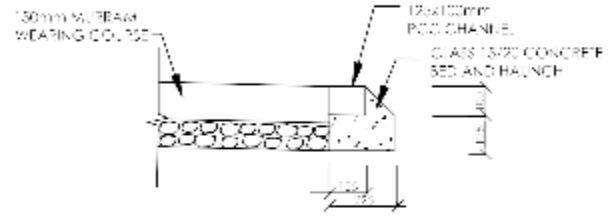

DETAIL 'D'
TYPICAL DETAIL OF CHANNEL

SCALE 1:25

NOTE

ALL DIMENSIONS ARE IN mm UNLESS OTHERWISE STATED

ABBREVIATIONS

℄ - CENTRE LINE
mm - MILIMETER
G.L. - GROUND LEVEL
m - METER
PCC - PRECAST CEMENT CONCRETE

TYPICAL CONCRETE BLOCKS SURFACE ROAD DETAILS

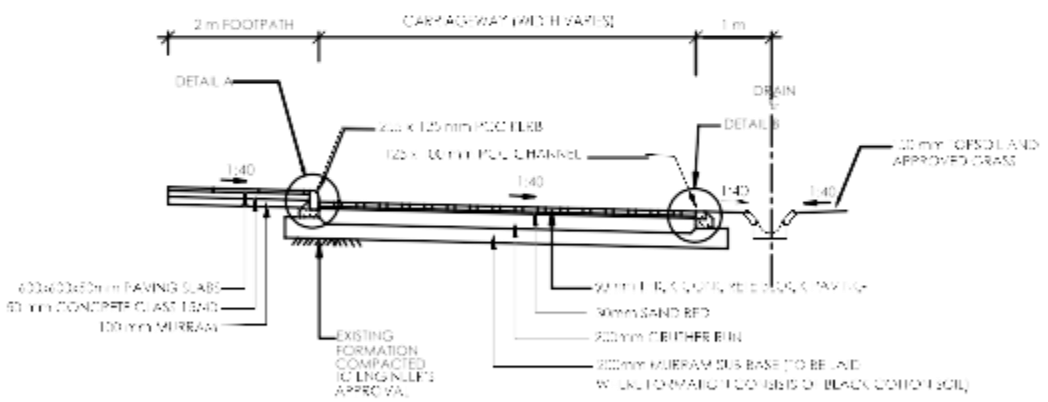

TYPICAL CROSS SECTION FOR CARRIAGEWAY IN CUT

SCALE 1:100

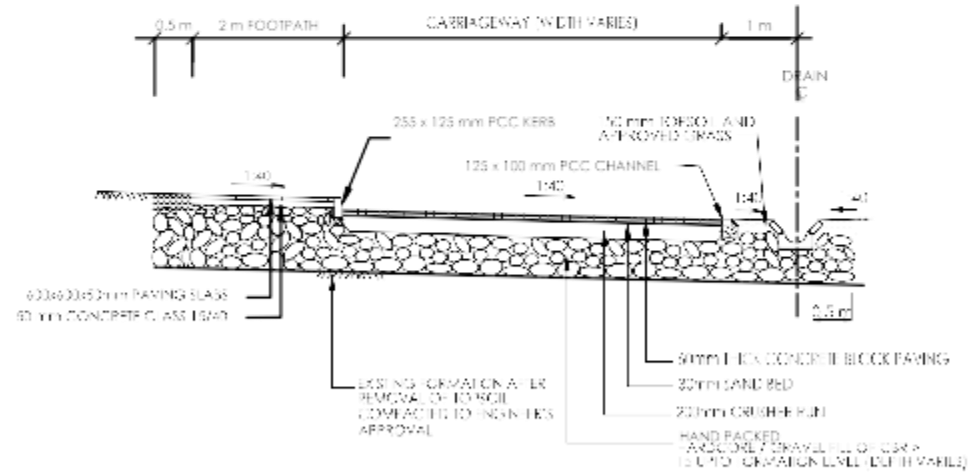

TYPICAL CROSS SECTION FOR CARRIAGEWAY IN FILL

SCALE 1:100

DETAIL A

DETAIL B

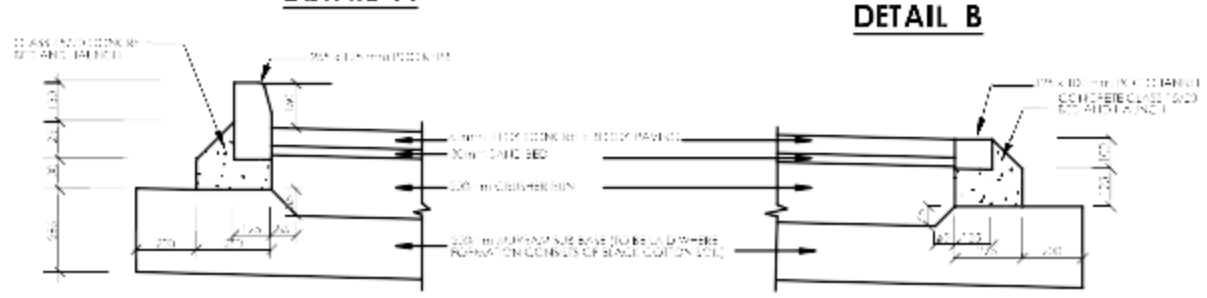

DETAIL OF KERB

SCALE 1:25

DETAIL OF CHANNEL

SCALE 1:25

CONSTRUCTION OF BURBURIS WATER SUPPLY PROJECT

DETAILS OF DRAWING:

STANDARD DRAWINGS

TYPICAL ROAD CROSS SECTION DETAILS

Designed by		Drawn By	AHI
Checked By		Approved by	
Scale	1:100	Date	MAY 2026
Job No		AutoCAD File	
DRG No.	Dwg/06	REV.	

DETAILS OF STORM WATER CATCHPIT

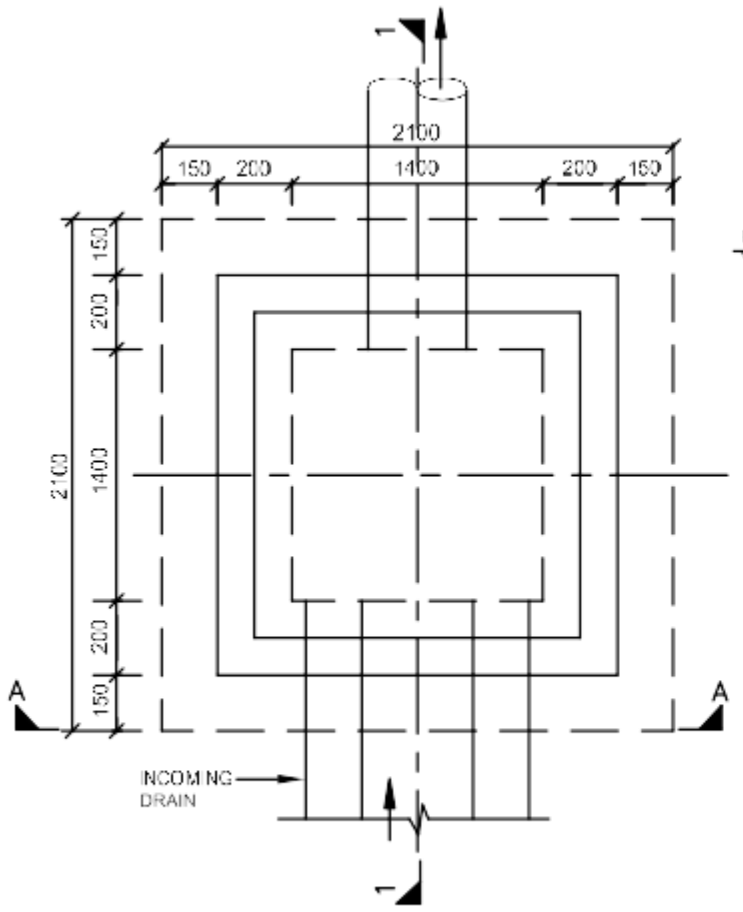

PLAN
TYPICAL STORM WATER CATCHPIT
SCALE 1:20

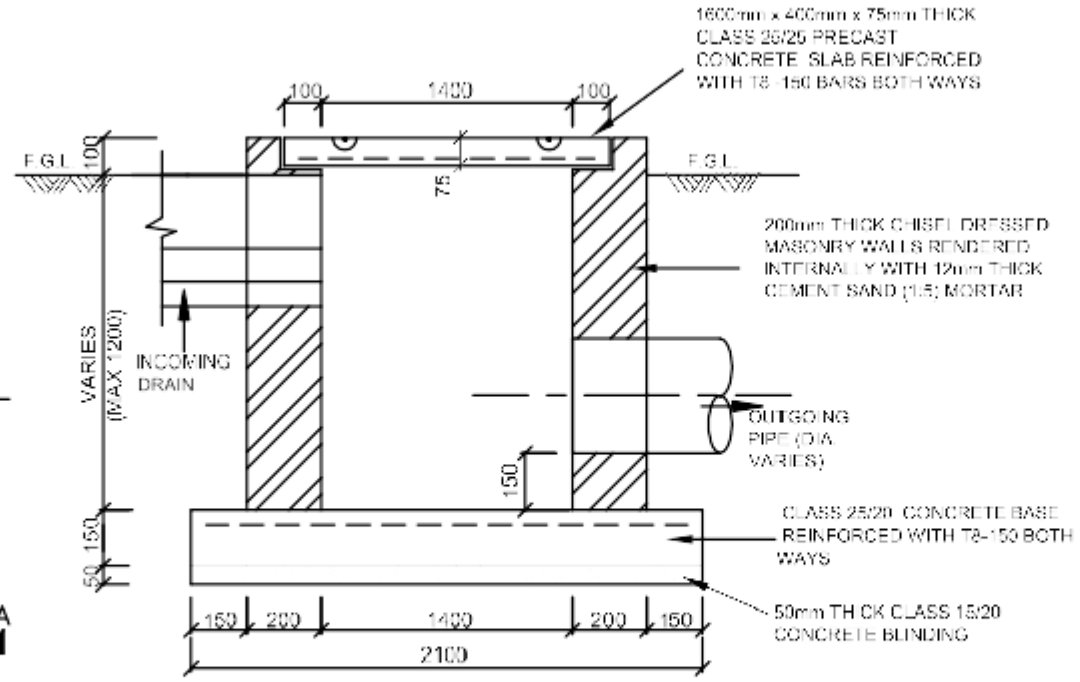

SECTION 1-1
SCALE 1:20

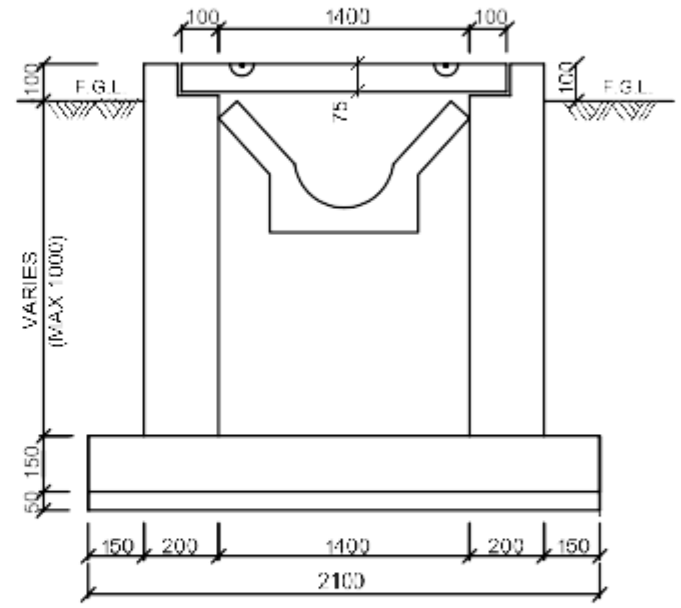

ELEVATION A- A
SCALE 1:20

NOTES

1. ALL DIMENSIONS ARE IN MM UNLESS OTHERWISE STATED
2. LENGTH OF EACH CASCADE TO BE 1000mm

ABBREVIATIONS

I.B. - INVERT BLOCK
I.B.D. - INVERT BLOCK DRAIN
DIA - DIAMETER
mm - MILIMETER
F.G.L - FINISHED GROUND LEVEL

DETAILS OF EARTH DRAIN TYPE '1'

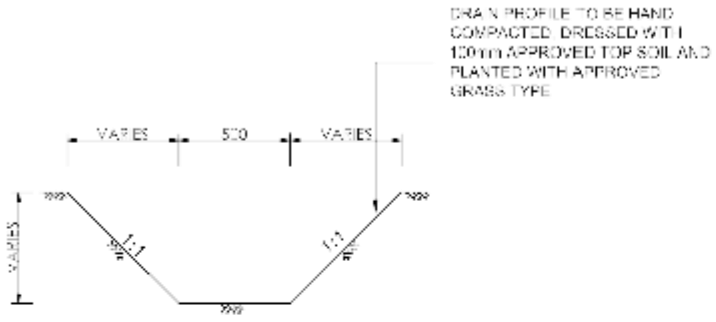

EARTH DRAIN TYPE 1
NTS

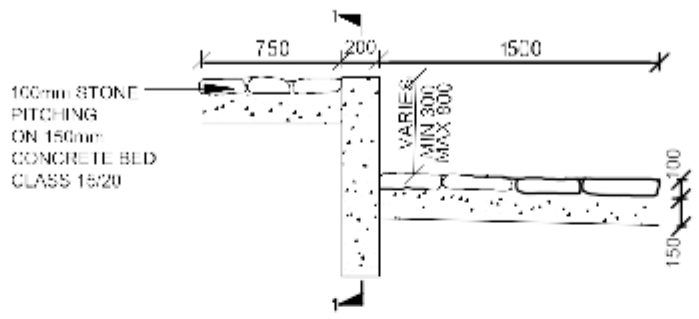

SECTION
SILL FOR DRAIN TYPE 1
SCALE 1:40

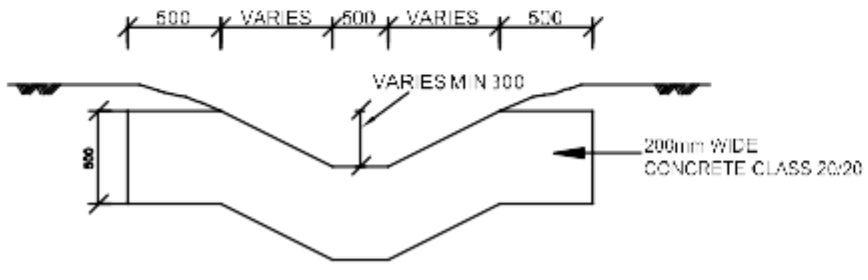

ELEVATION 1-1
SCALE 1:40

DETAILS OF DRAIN TYPE '2' (STONE PITCHED DRAIN)

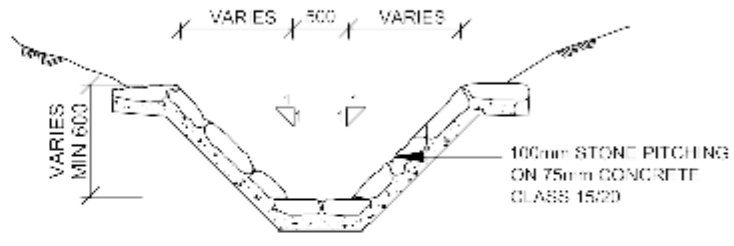

DRAIN TYPE 2
(STONE PITCHED DRAIN)
SCALE 1:40

CONSTRUCTION OF
BURBURIS WATER SUPPLY
PROJECT

DETAILS OF DRAWING:

STANDARD DRAWINGS
DETAILS OF STORM WATER CATCH PIT AND EARTH DRAINS

Designed by:	Drawn by: AM
Checked by:	Approved by:
Scale: 1:100	Date: MAY 2018
Job No.	ACAD File:
DRG No. Dwg/07	REV

DETAILS OF WATTLE POSTS FOR BARBED WIRE FENCE

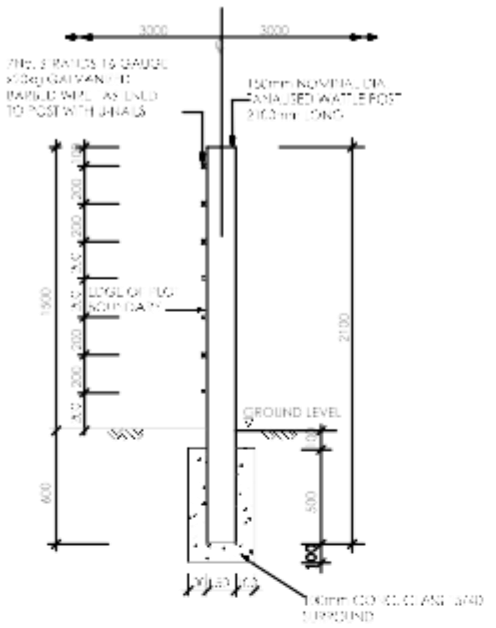

TYPICAL END ELEVATION - SINGLE POST
(TO BE AT 3.0m CENTRES)
(NTS)

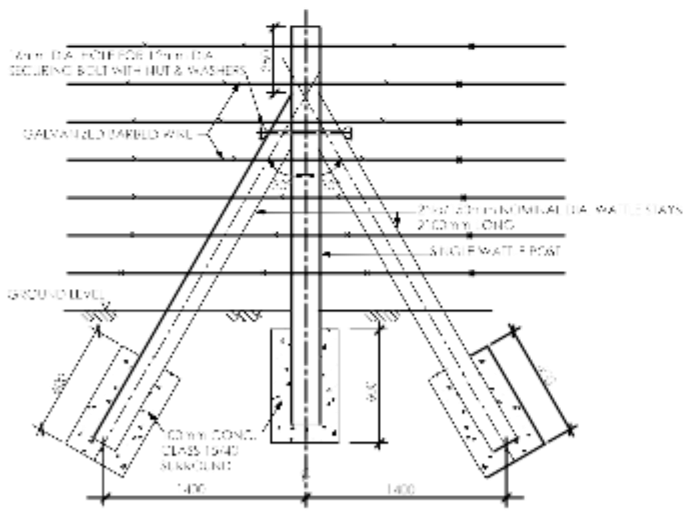

TYPICAL FRONT ELEVATION - STAYED POST
(STAYS TO BE PROVIDED AT 30.0m c/c AND AT CORNERS
(NTS)

NOTES

a) ALL CORNER POSTS AND EVERY 15TH LINE POST TO HAVE NO. 12 STAY
b) POSTS TO BE AT 3.0m c/c CENTRES
c) TOP OF ALL POSTS TO BE KEPT IN UNIFORM LINE
d) ALL STAY LEADING STRAIGHT UNTIL STAY CLEAR
e) N.T.S. = NOT TO SCALE

DETAILS OF PRECAST CONCRETE POSTS FOR CHAIN LINK FENCE

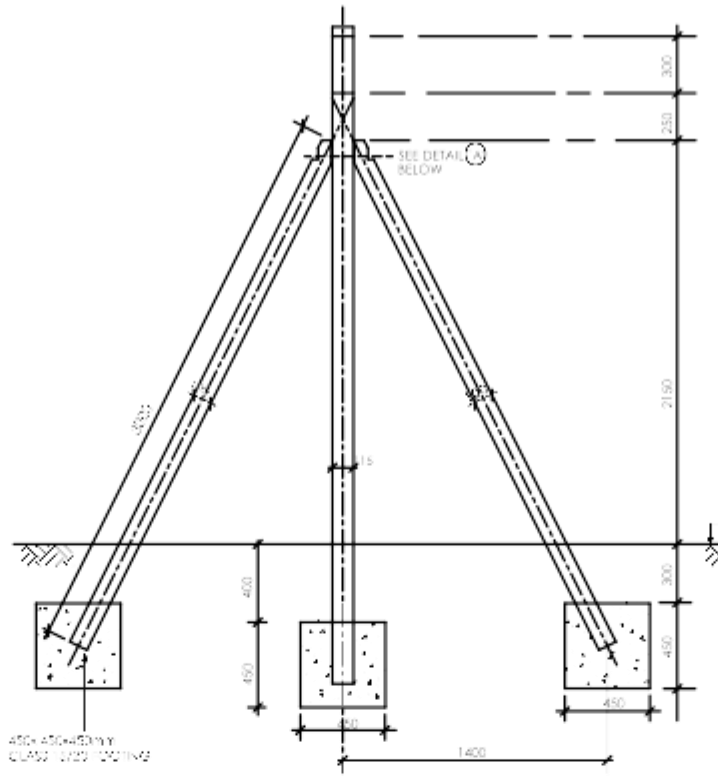

DETAILS OF STRAINING POST FOR CHAIN LINK FENCE AT 33.3m Cts.
SCALE 1:20

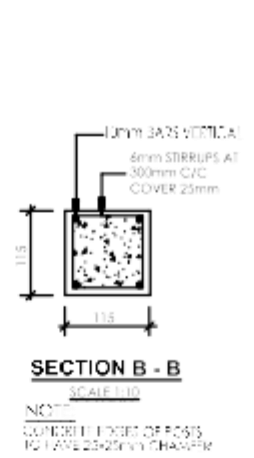

SECTION B - B
SCALE 1:10

NOTE
CONCRETE POST OF POSTS TO HAVE 25N/mm² STRENGTH

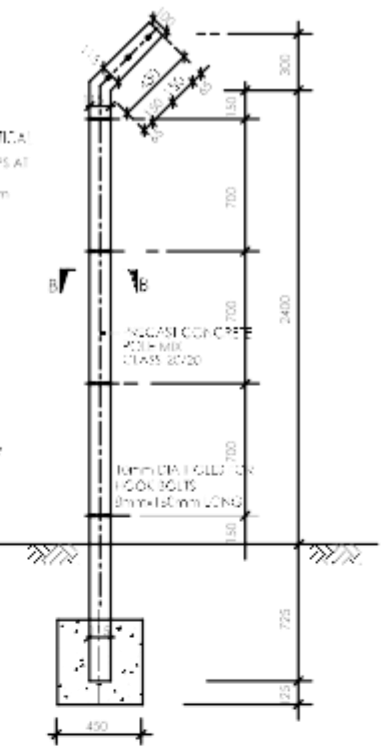

DETAILS OF SINGLE P.C.C. POST AT 3.30m Cts.
SCALE 1:20

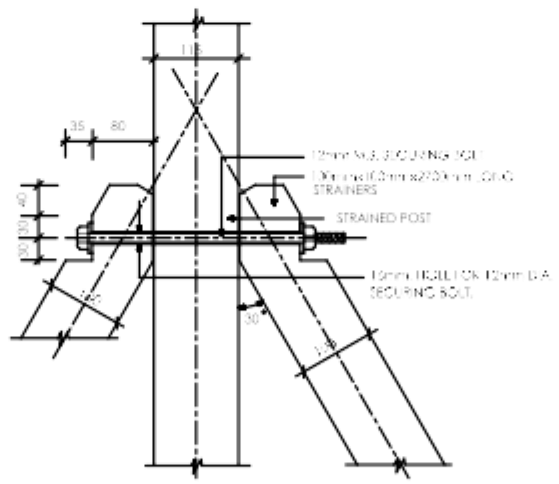

DETAIL (A)
SCALE 1:10

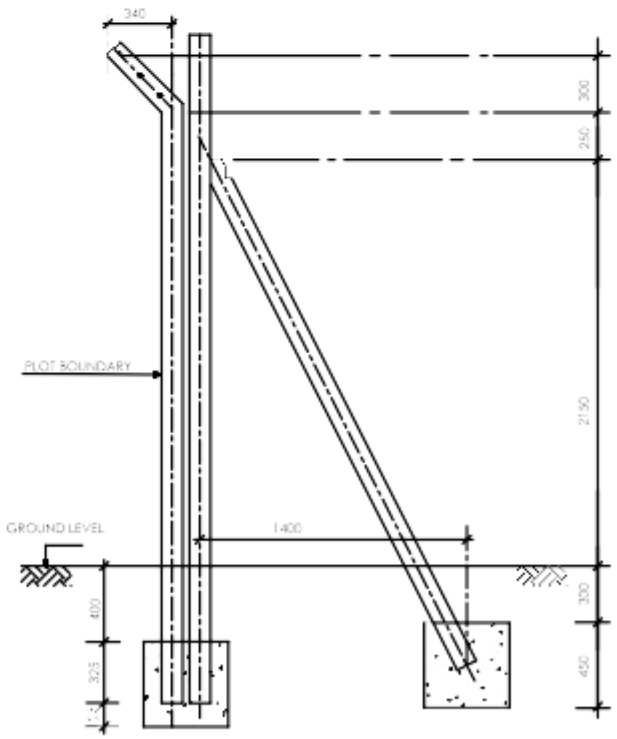

DETAILS OF CORNER POSTS
SCALE 1:40

NOTES

a) APPROXIMATELY EVERY 15TH POST
ALL ALL CORNER POSTS TO BE STRAINED
b) POSTS TO BE AT 3.00m CENTRES
c) TOP OF ALL POSTS TO BE KEPT IN
UNIFORM LINE

NOTES

a) CONCRETE MIXES TO BE AS FOLLOWS
i) POSTS CLASS 20/20
ii) STRAINER POSTS CLASS 25/20
iii) FOUNDATION BLOCK CLASS 15/20 CONC
b) CHAIN LINK TO BE NO 14 GAUGE 12
GALVANISED STEEL WIRE
c) STRAINING WIRES TO BE 12 GAUGE
GALVANISED STEEL PLAIN WIRE
d) STAYS ON CORNER TO BE 12 GAUGE
GALVANISED STEEL BARBED WIRE
e) ALL STRUCTURAL DIMENSIONS TO BE CONFIRMED ON SITE BEFORE COMMENCING ANY FABRICATION
f) STRAINING WIRES TO BE HELD TO POST WITH GALVANISED HOOK BOLTS 6mm DIA x 60mm LONG
g) WHERE THE POSTING APPROACHES OR CROSSES A HILL THE POSTS SHOULD BE ERECTED WITH GRADUATED HEIGHTS TO THE SITE
h) ALL DIMENSIONS ARE IN mm UNLESS OTHERWISE STATED
i) ALL PRECAST CONCRETE POSTS OF POSTS TO HAVE 20N/mm² STRENGTH

ABBREVIATIONS

C/C = CENTRE TO CENTRES
CRS = CENTRES
M.S. = MILD STEEL
P.C.C. = PRECAST CEMENT CONCRETE
CONC. = CONCRETE
mm = MILLIMETER
UPVC = UNPLASTICISED POLYVINYL CHLORIDE
DIA. = DIAMETER
Kg = KILOGRAMME
℄ = CENTRE LINE
m = METRE
NTS = NOT TO SCALE
Dr = DRAWING

CONSTRUCTION OF BURBURIS WATER SUPPLY PROJECT

DETAILS OF DRAWING:

STANDARD DRAWINGS

DETAILS OF FENCING POSTS

Designed by:		Drawn by:	ANN
Checked by:		Approved by:	
Scale:	1:10	Date:	MAY 2006
I.A. No.:		ACAD File:	
DRG No.	Dwg/07	REV	

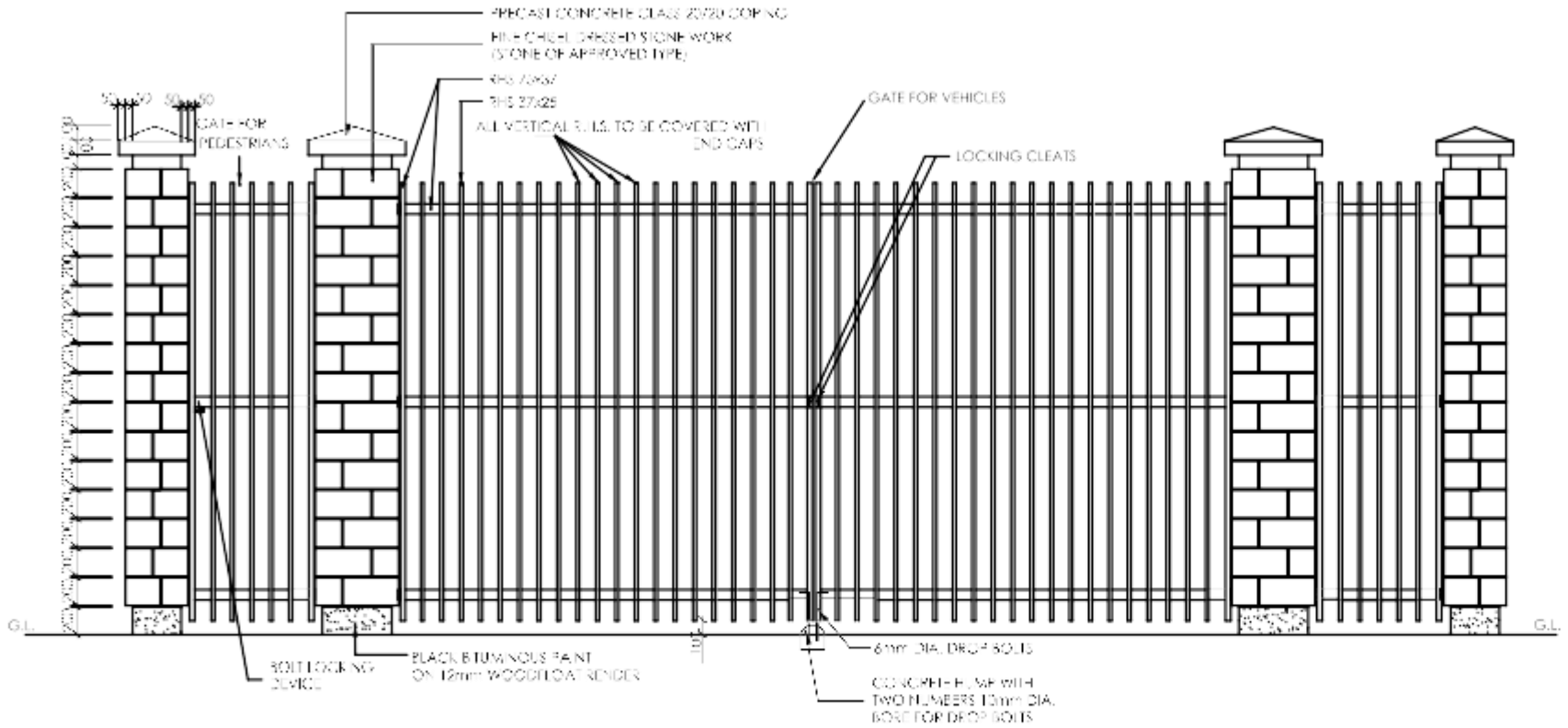

ELEVATION
SCALE: 1:50

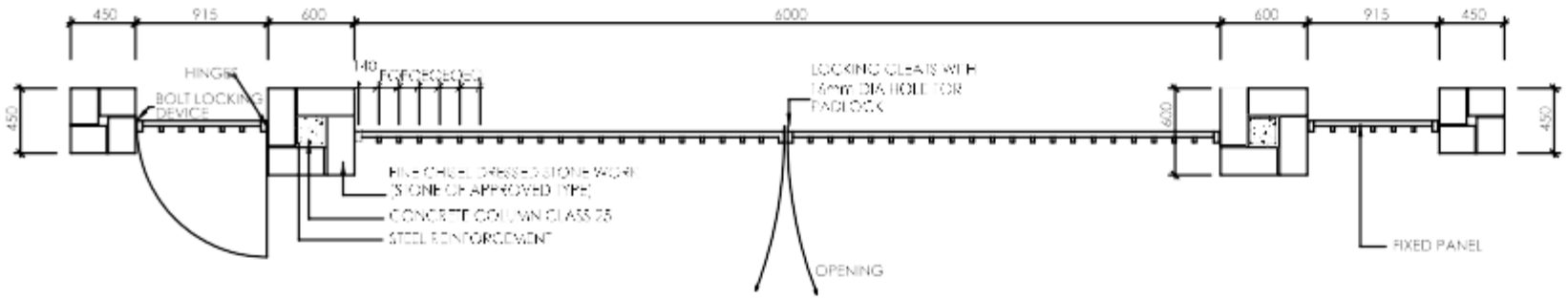

PLAN
SCALE: 1: 50

DETAILS OF 6m WIDE GATE

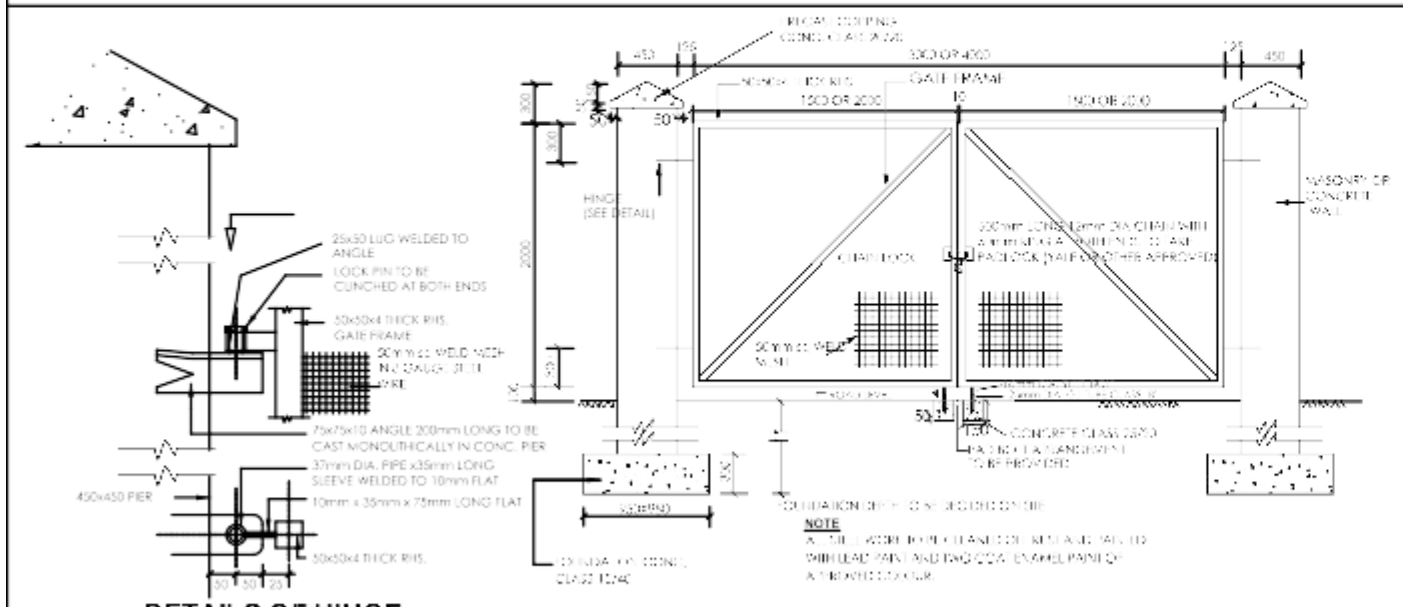

DETAILS OF HINGE (VIEW AT Y - Y)
SCALE 1:5

ELEVATION
SCALE 1:20

DETAILS OF 3m & 4m WIDE GATE

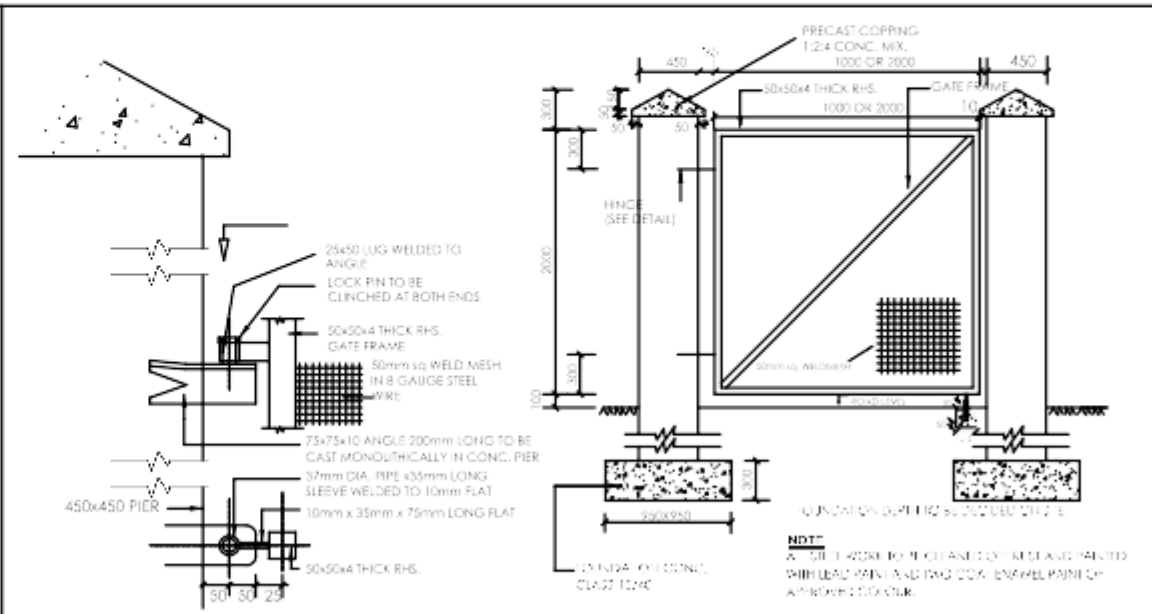

DETAILS OF HINGE (VIEW AT Y - Y)
SCALE 1:5

ELEVATION

DETAILS OF 1m WIDE & 2m WIDE GATE

NOTES

1. ALL DIMENSIONS ARE IN MM UNLESS OTHERWISE STATED

ABBREVIATIONS

mm - MILIMETER
DIA. - DIAMETER
G.L. - GROUND LEVEL
E.Q. - EQUAL
SQ - SQUARE
CONC. - CONCRETE

CONSTRUCTION OF BURBURIS WATER SUPPLY PROJECT

DETAILS OF DRAWING:

STANDARD DRAWINGS
DETAILS OF GATES (SHEET 1 OF 2)

Designed by:	Drawn by: AMI
Checked by:	Approved by:
Scale: 1:50	Date: MAY 2014
Job No.:	AutoCAD file:
DRG No. Dwg/09	

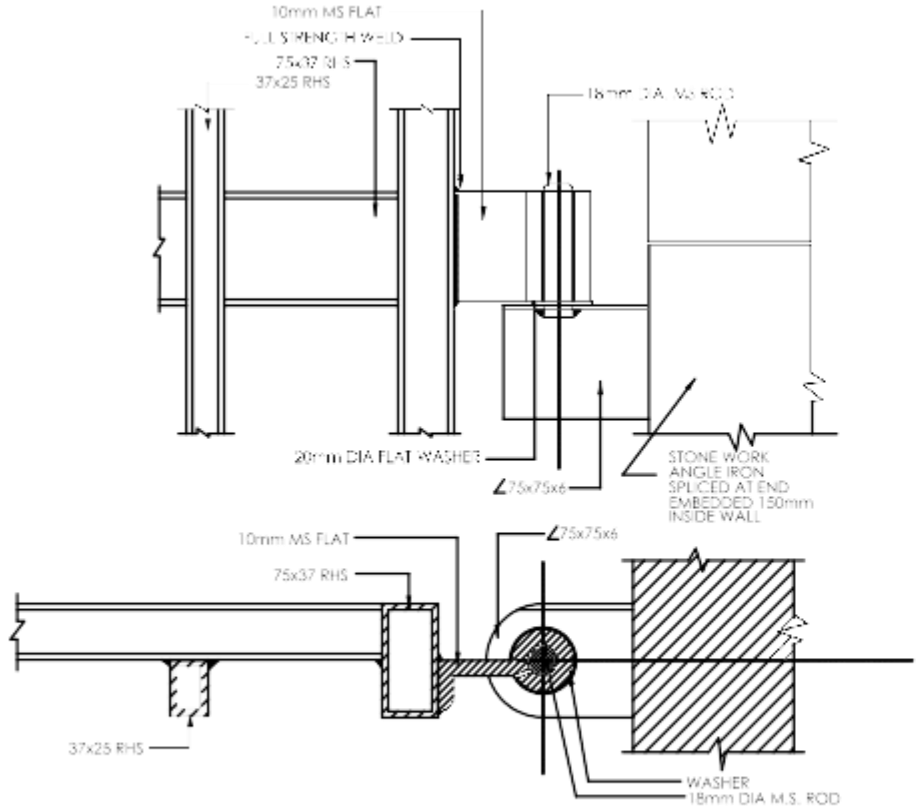

DETAIL OF HINGE FOR LARGE GATE

SCALE: 1:5

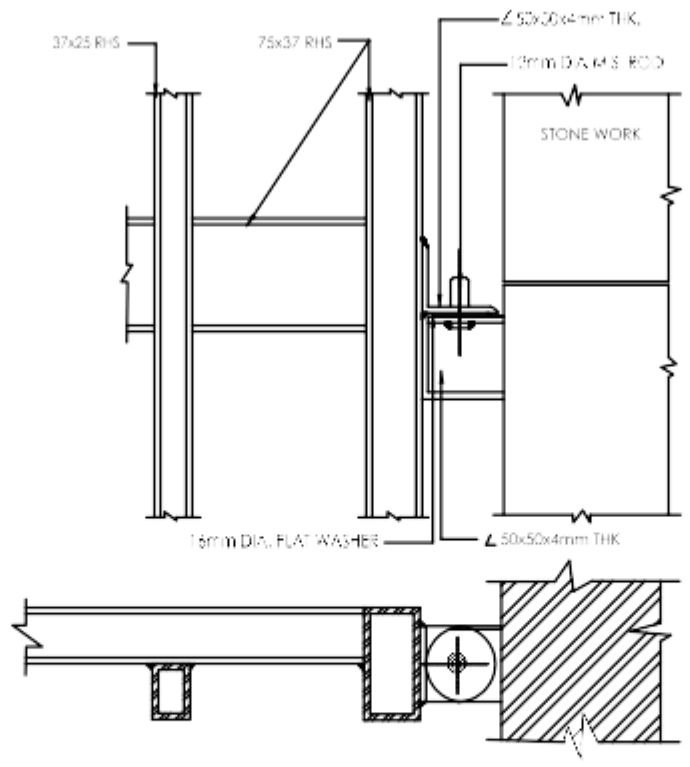

DETAIL OF HINGE FOR SMALL GATE

SCALE: 1:5

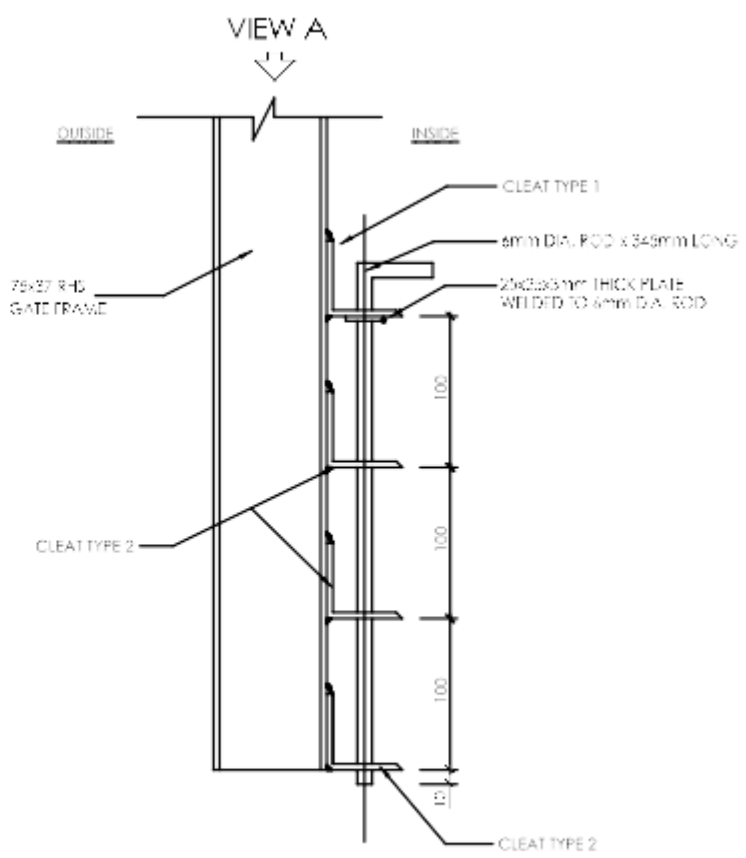

DETAIL OF DROP BOLT FOR LARGE GATE

SCALE: 1:5

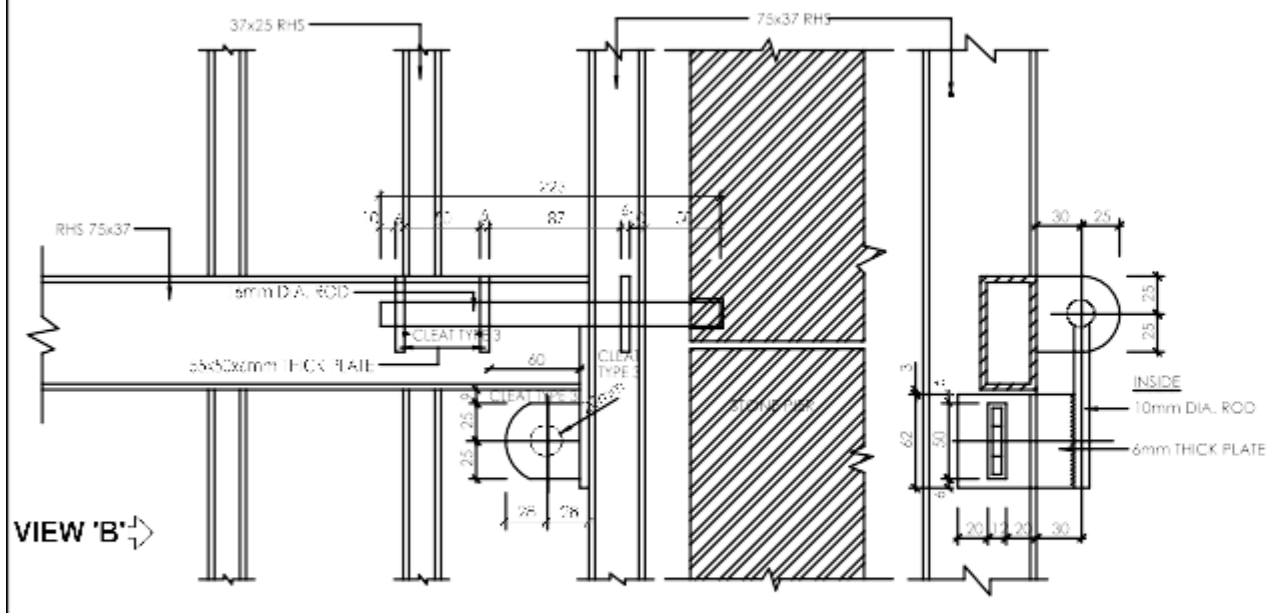

VIEW 'B'

DETAIL OF LOCKING BOLT FOR SMALL GATE

SCALE: 1:5

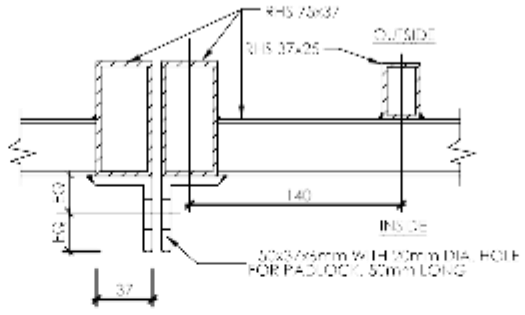

DETAIL OF LOCKING CLEATS FOR LARGE GATE

SCALE: 1:5

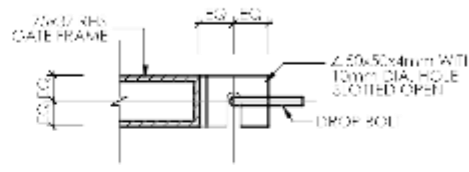

CLEAT TYPE 1

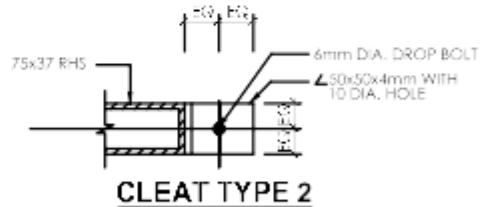

CLEAT TYPE 2

DETAIL OF LOCKING BOLT FOR LARGE GATE VIEW A

SCALE: 1:5

NOTES

1. ALL DIMENSIONS ARE IN MM UNLESS OTHERWISE STATED

ABBREVIATIONS

mm - MILIMETER
DIA. - DIAMETER
M.S. - MILD STEEL
E.Q. - EQUAL
∠ - ANGLE IRON
THK. - CONCRETE

CONSTRUCTION OF BURBURIS WATER SUPPLY PROJECT

DETAILS OF DRAWING:

STANDARD DRAWINGS

DETAILS OF GATES (SHEET 1 OF 2)

Designed by:	Drawn by: AMI
Checked by:	Approved by:
Scale: 1:100	Date: MAY 2020
Job No.:	ACAD File:
DRG No. Dwg/10	

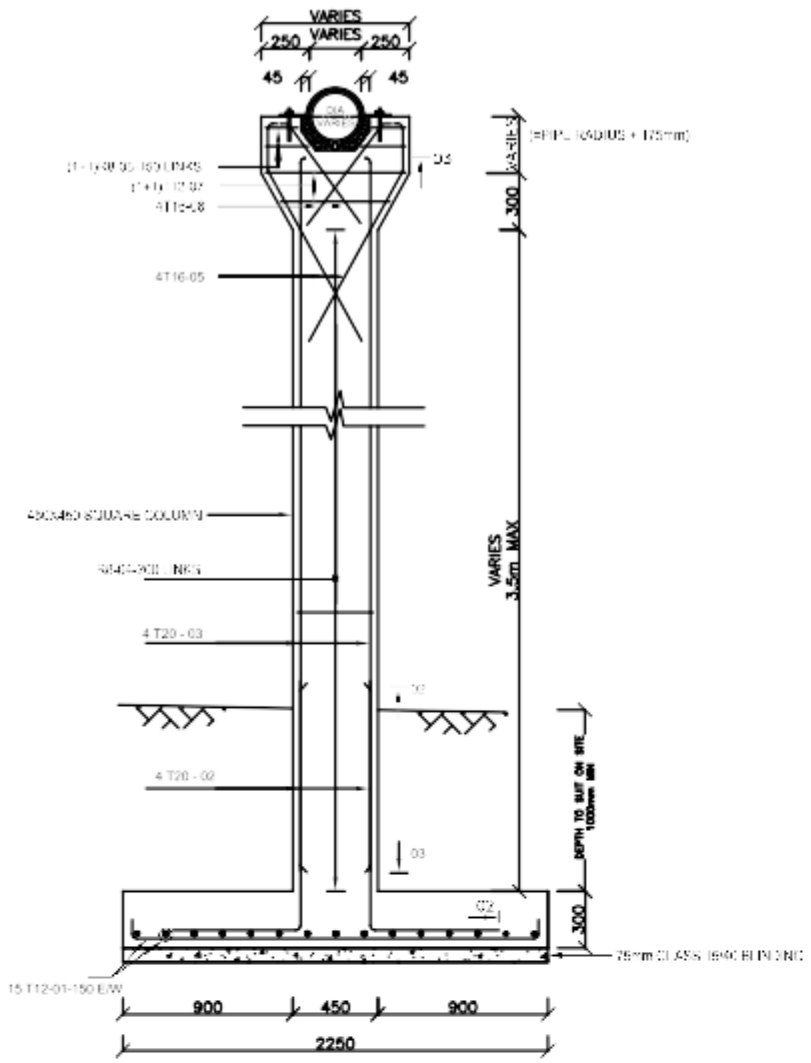

PIER TYPE 'A'
(HEIGHT UPTO 3.5m)
SCALE 1:40

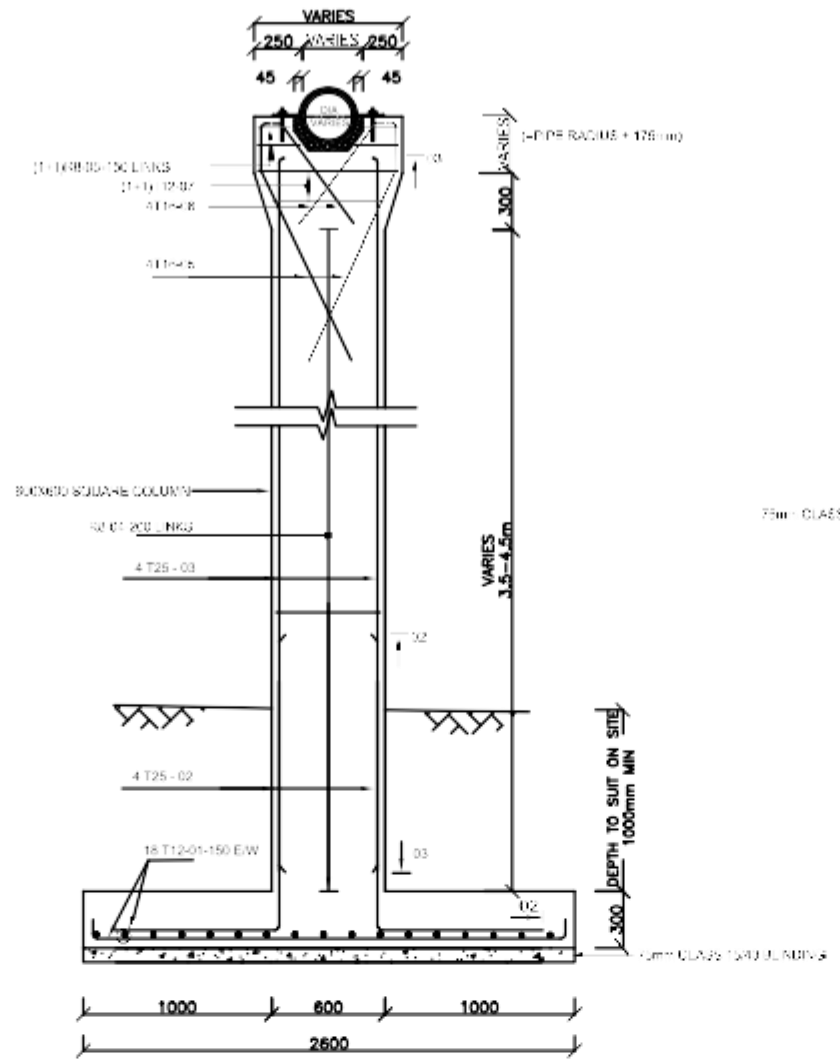

PIER TYPE 'B'
(HEIGHT 3.5-4.5m)
SCALE 1:40

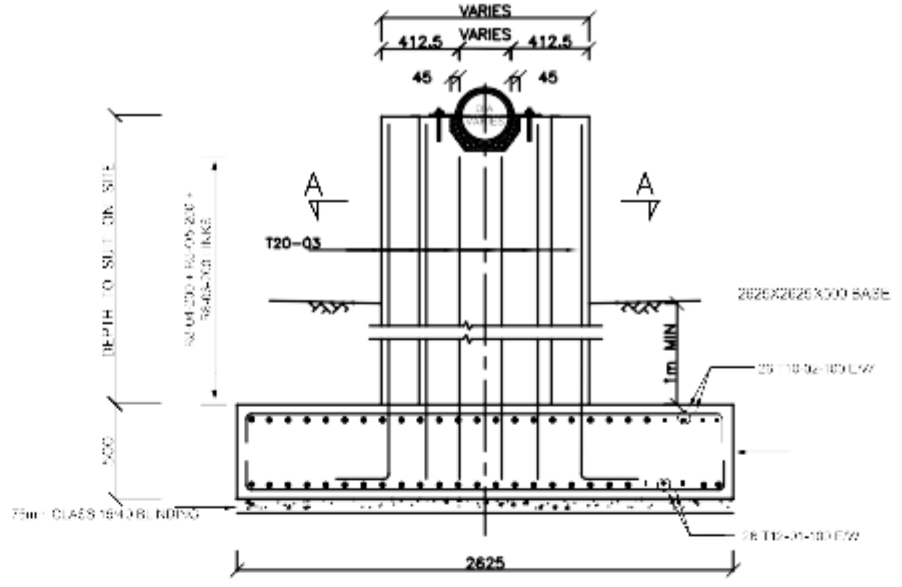

PIER TYPE 'C' (4m HIGH MAX)
(TO BE USED AT RIVER CROSSINGS)
SCALE 1:40

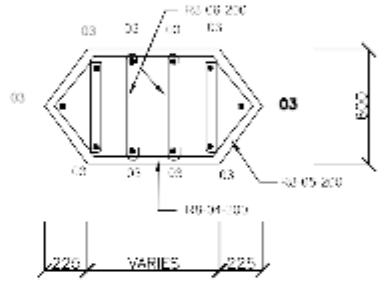

SECTION A-A

PIER TYPE 'C' (4m HIGH MAX)
(TO BE USED AT RIVER CROSSINGS)
SCALE 1:40

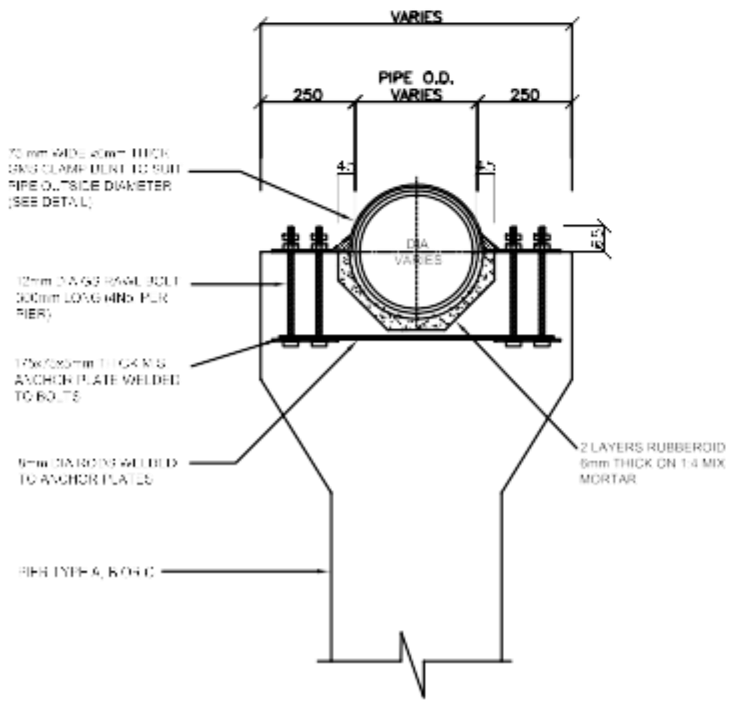

TYPICAL PIPE FIXING
DETAIL ON COLUMN HEAD
SCALE 1:20

ANCHOR PLATES & GMS CLAMP DETAILS

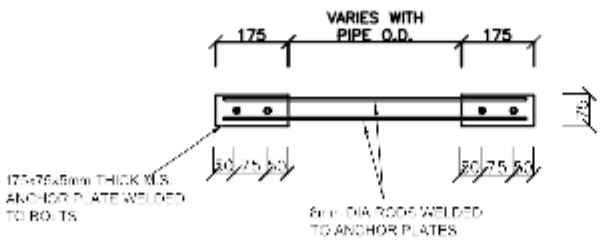

ANCHOR PLATE DETAIL
(N.T.S.)

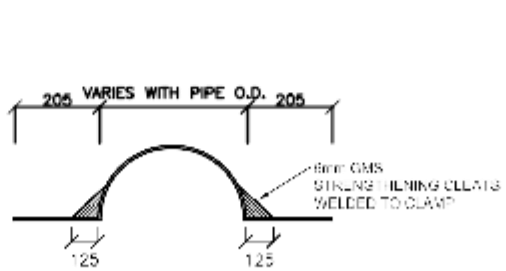

GMS CLAMP - ELEVATION
(N.T.S.)

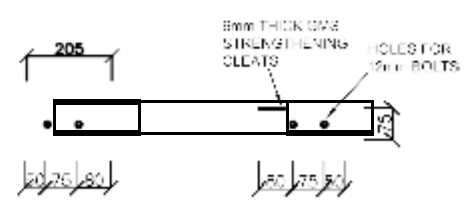

GMS CLAMP - PLAN
(N.T.S.)

NOTES

1. [illegible]
2. DESIGN CRITERIA
   (a) DESIGN CODES B.S. 5400 & B.S. 8110
   (b) UNIFORM AXIAL COMPRESSION TO JUNCTION OF HEADSTOCK AS 750 KN/M
3. CONCRETE
   (a) CEMENT TO BE ORDINARY PORTLAND CEMENT TO B.S. 12
   (b) CONCRETE AGGREGATE TO COMPLY WITH B.S. 882
   (c) WATER IN CONCRETE MIXES TO B.S. 3148
   (d) CONCRETE GRADES TO BE AS FOLLOWS:
   BASE CONCRETE 15 N/mm² AND 20 N/mm² RC MIX
   GRADE 30/37
   REINFORCED CONCRETE GRADE 30/37
   (e) MINIMUM COVER TO ALL REINFORCEMENT TO BE 40mm UNLESS AS SPECIFIED BELOW OR SHOWN ON DRAWINGS.
   MINIMUM COVER SHALL BE AS FOLLOWS:
   - SLABS 25mm
   - BEAMS 40 mm
   - COLUMNS 40 mm
   - FOUNDATIONS AND FOOTINGS 50 mm
   (f) ALL SHOP PLANS SHALL BE PREPARED, CERTIFIED BY A REGISTERED PROFESSIONAL ENGINEER AND SUBMITTED TO THE ENGINEER FOR APPROVAL BEFORE ANY WORK COMMENCES.
4. REINFORCEMENT
   (a) BENDING OF REINFORCEMENT SHALL BE IN ACCORDANCE WITH B.S. 4466
   (b) BENDING DIMENSIONS TO B.S. 4466
   (c) THE MINIMUM ANCHORAGE LENGTH FOR TENSION BARS SHALL BE AS FOLLOWS:
   - T25 BARS 1000mm
   - T20 BARS 800mm
   - T16 BARS 640mm
   - T12 BARS 480mm
   - T10 BARS 400mm
   (d) LAPS SHALL BE STAGGERED AND SHALL BE AS FOLLOWS:
   - T25 BARS 1000mm
   - T20 BARS 800mm
   - T16 BARS 640mm
   - T12 BARS 480mm
   - T10 BARS 400mm
5. JOINTS
   (a) THE POSITION AND NUMBER OF INTERMEDIATE JOINTS TO BE AS DIRECTED BY THE ENGINEER OR AS SHOWN ON THE DRAWINGS.
   BEFORE PLACING FRESH CONCRETE TO OLD SURFACE SUCH SURFACE SHALL BE THOROUGHLY CLEANED AND ROUGHENED TO EXPOSE THE AGGREGATE. LOOSE MATERIAL SHALL BE REMOVED SO THAT THE CONSTRUCTION JOINT SHALL BE A SATISFACTORY JUNCTION FOR CONCRETING.
   (b) ALL EXPANSION JOINTS SHALL BE FILLED WITH 12mm THICK PREFORMED EXPANSION JOINT FILLER STRIPS.
   (c) THE TOP SURFACE OF CONCRETE SHALL BE FINISHED UNLESS OTHERWISE NOTED ON THE DRAWINGS.
   (d) CONCRETE SHALL BE CURED AND PROTECTED AS DIRECTED BY THE ENGINEER.

CONSTRUCTION OF BURBURIS WATER SUPPLY PROJECT

DETAILS OF DRAWING:
STANDARD DRAWINGS
DETAILS OF PIERS FOR PIPE AERIAL CROSSINGS

Designed By:		Drawn By:	AMI
Checked By:		Approved By:	
Scale:	1:100	Date:	MAY 2026
Job No.:		ACAD File:	
DRG No.	Dwg/11	REV	

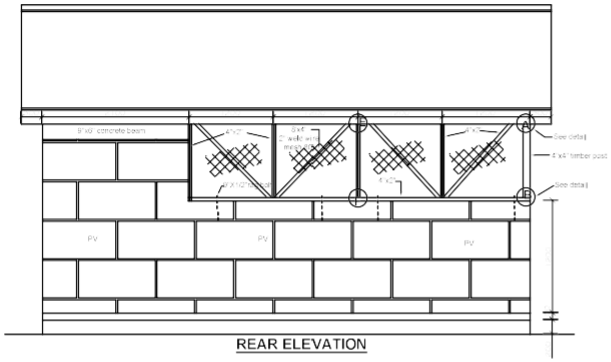

REAR ELEVATION

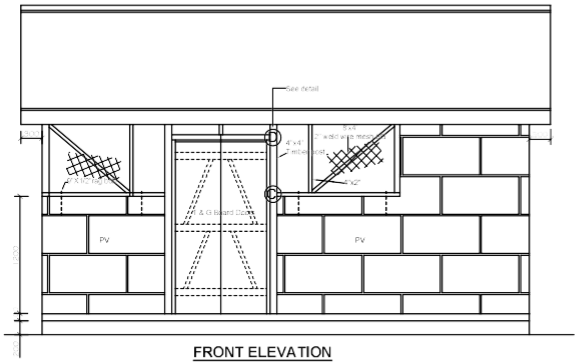

FRONT ELEVATION

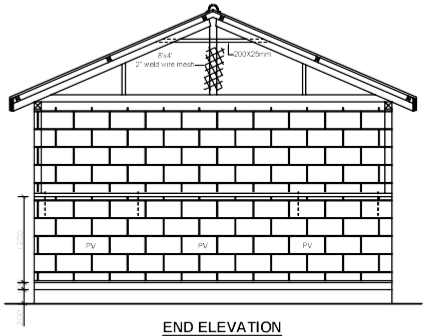

END ELEVATION

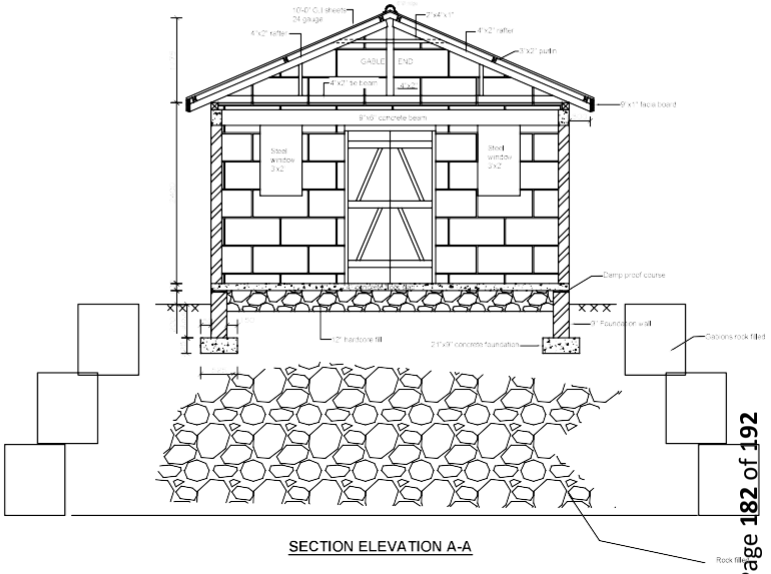

SECTION ELEVATION A-A

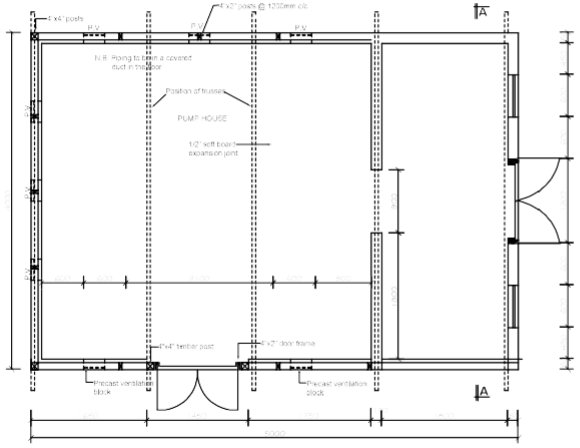
4"x2" posts @ 1200mm c/c
4"x4" posts
P.V.
N.B. Piping to be in a covered duct in the floor
Position of trusses
PUMP HOUSE
1/2" soft board expansion joint
A
4"x4" timber post
4"x2" door frame
Precast ventilation block
Precast ventilation block
2400
1200
2400
2400
2400

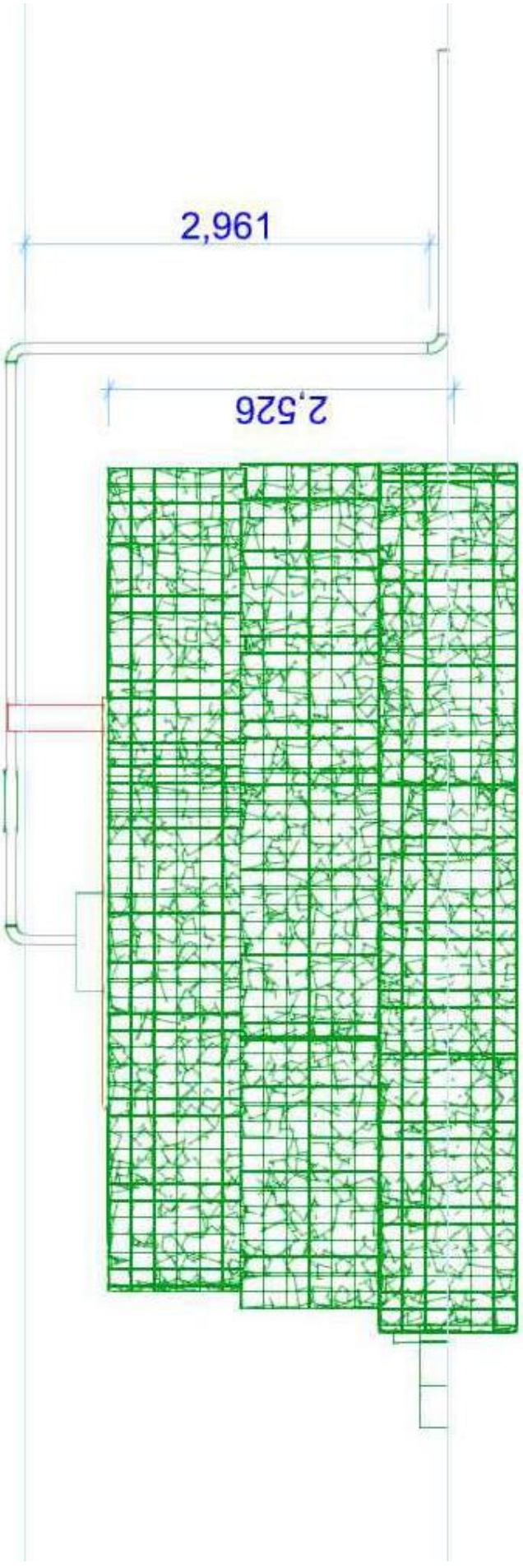
2,961
2,526

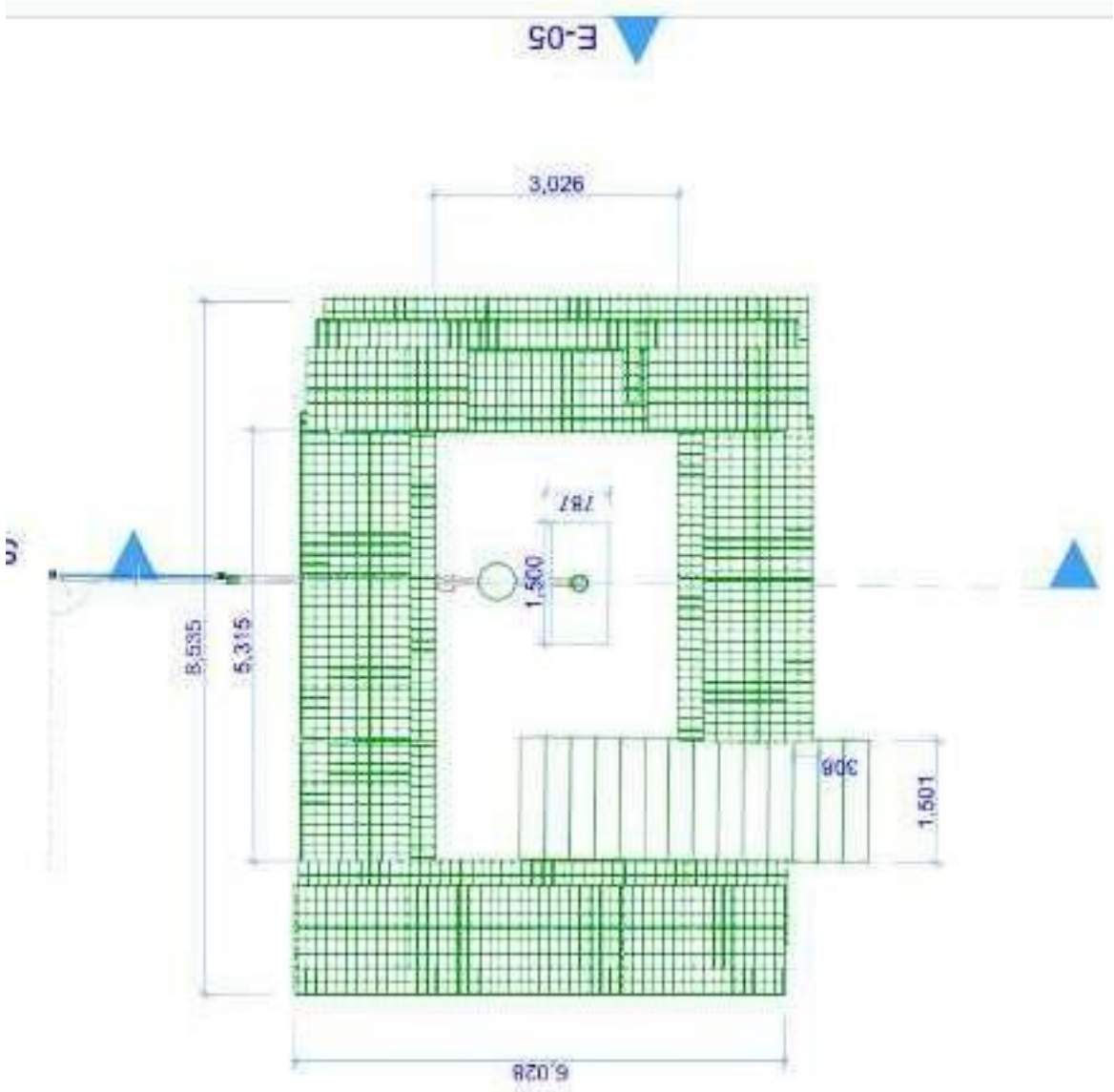
E-05
3,026
8,535
5,315
1,500
1,501
6,028

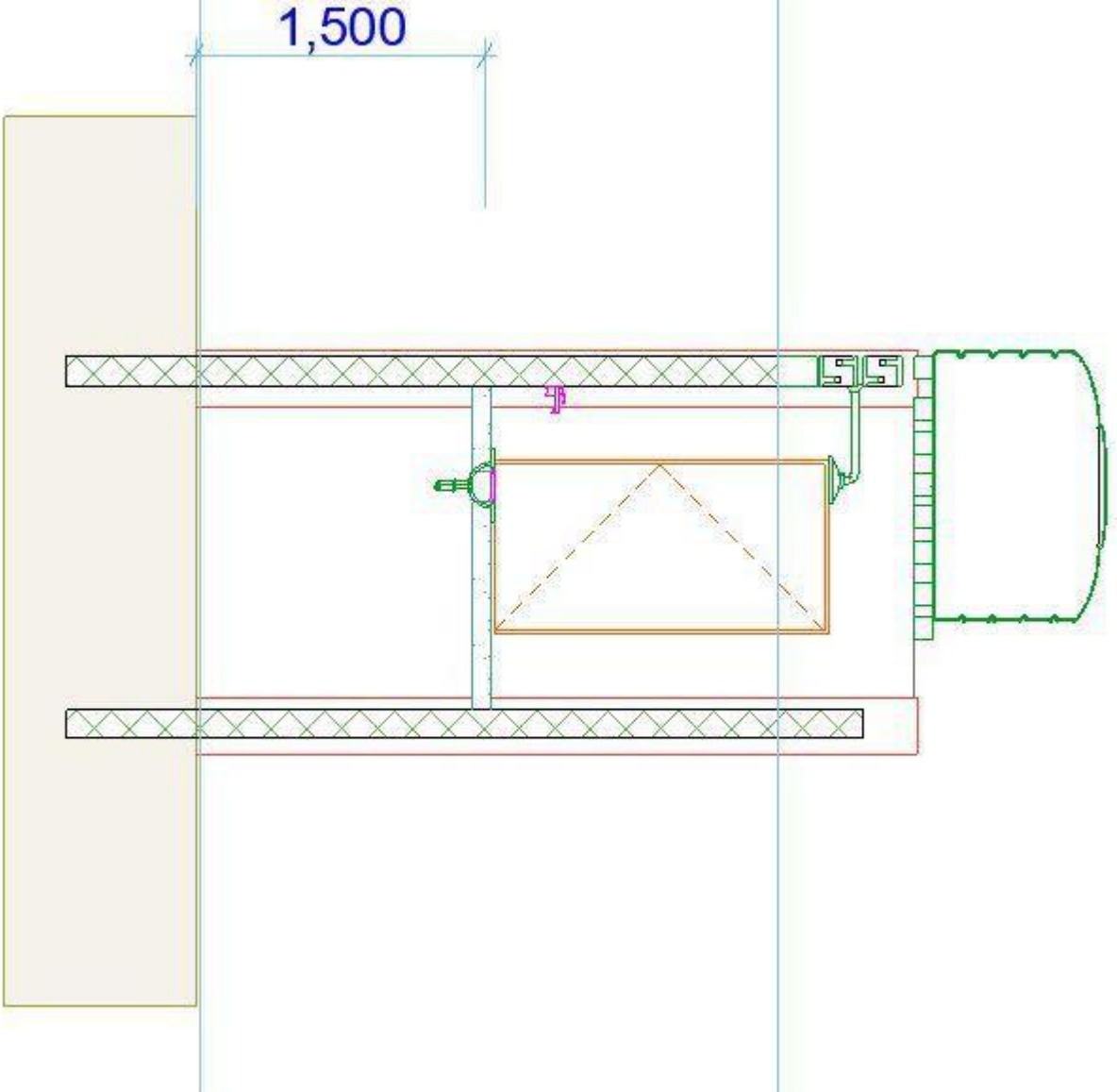
1,500

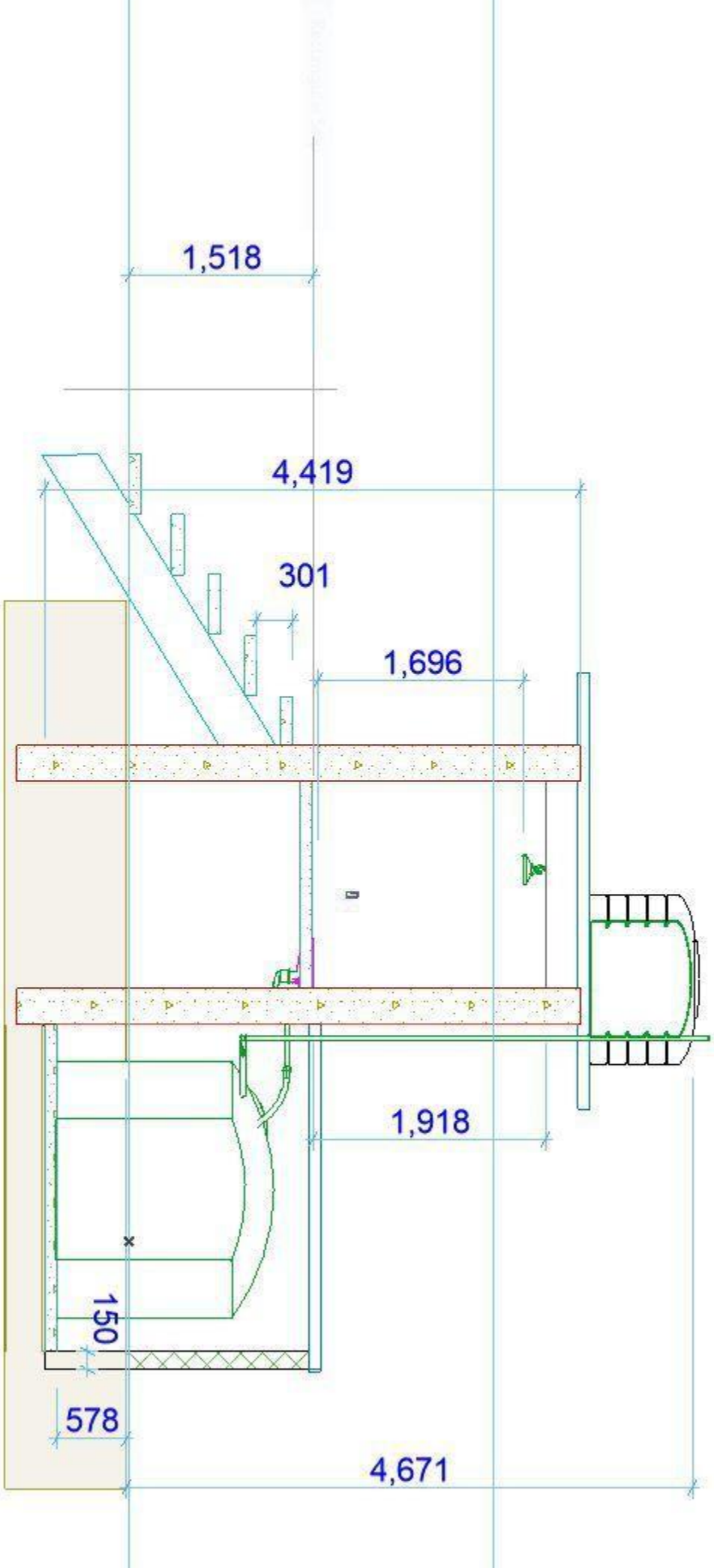
1,518
4,419
301
1,696
1,918
150
578
4,671

